# OPERATION MANUAL

## *MULTI RIP SAW*

## MULTIMAX 170-500 XL


**WARNING!**

***The operator must thoroughly read this manual before operation.***
***Keep this manual for future reference.***

***Henrik Winter Holztechnik GmbH***
*Druckereistr. 8*
*04159 Leipzig*

*Tel: +49 (0)341/ 4619021 Fax: +49 (0)341/4618358 Funk: +49 (0)171/2820443*
*Em@il: info@winter-holztechnik.de Internet: www.winter-holztechnik.de*

H.WINTER HOLZTECHNIK

# INTRODUCTION

Thank you very much for selecting our machines. This manual will give you a detailed instruction of operation, maintenance and safe working. Please keep this manual carefully. Before operating, operators must read this manual carefully to ensure safety.

If you meet any problem during operation or of this machine itself, please contact local distributors or contact us directly. You will get the fastest and sincerest service. If you have any good suggestions on this machine or have different points on this instruction book, please directly inform us. We will give our attention to them and give you sincere appreciations.

**NOTE: STATEMENTS AND DIAGRAMS IN THIS BOOK ARE FOR ILLUSTRATION ONLY. WE RESERVE THE RIGHTS TO MAKE FURTHER IMPROVEMENTS ON TECHNOLOGY, SPECIFICATIONS AND DIMENSIONS.**

# CONTENTS

# I. SAFETY PRECAUTIONS

Safety precautions describes some regulations to operate machine safely. Before operation, all parts of this manual must be fully understood.

## 1-1 GENERAL SAFETY REGULATIONS

Miss-operation may lead to serious accidents and hazards to personnel. Users must follow the safety regulations below with extra attention.

To prevent accidents, read through this manual carefully before attempting installation, operation or maintenance. Ignoring this point may lead to hazards to personnel safety.

**Note: This machine is not allowed to be used out of its functions. Never use this machine before fully understanding its functions and use.**

Hazards may arise from misuse, abuse, operating by personnel without adequate knowledge or operating by untrained or irresponsible personnel. QINGCHENG shall not be responsible for any accident and loss caused by miss-operation, misuse or abuse. Users shall be responsible for these risks and losses.

This machine shall be operated or maintained only by authorized, trained and appointed personnel. These personnel must fully understand the possible hazards. Any personnel without good health or clear head are not allowed to operate this machine or stay near this machine.

While operation, any personnel except operator are not allowed to stay near this machine.

Before operation, every authorized personnel must read through this manual carefully, fully understand all the contents and be responsible for safety. This shall be recognized with signature by all the personnel taking part in operation.

While stopping the machine, the tools, feeding rollers and the drive units will not stop immediately. Dangers may still exist during this period. When open the safety shied or safety hood, please be aware of the rotating parts of this machine. **Note! Never touch cutting tools, feeding rollers and their driving devices before they come to a complete stop.**

Responsibilities must be clearly assigned to operators for adjustment, changing tools, operation and maintenance. Operators are obligated to operate this machine under safe conditions.

While hoisting the machine, make sure the hoisting equipments are capable of the weight of the machine.

After the machine has come into operation for a period of time , you must check the machine's each part, especially the each part's connecting bolt and screw. If the bolt and screw loose, you have to tighten up them to avoid influencing the machining accuracy of the machine or accidents.

## 1-2 PRECAUTIONS ON AUTOMATIC MUTIL-BLADE RIP SAW

For thickness-fix planed wood pieces , the machine can do multi-blade ripping. If want the machine to do other uses , please consult to manufactory. The process material must be standard type timber or wood, the sizes must be in conformity with the required specifications and parameters of the machine.

Regularly inspect and clean all the instruction labels on the machine. All the labels are important notes or operation instructions, must be read and learned carefully. Replace the labels that could not be read clearly from certain distance by new labels. Inspect all the safety devices everyday and before starting machine operation.

All the safety devices being dismounted for installation, changing tools, repairing or maintenance must be kept in place again before starting the machine.

While performing maintenance, all the covers, hoods and shields are not allowed to be opened until the power is turned OFF and all the movable parts (cutting tools, feeding rollers etc.) come to a complete stop. Make sure the machine will not be started accidentally before doing any maintenance work. During maintenance work, post up a notice to inform the other personnel that maintenance work is being conducted or lock the main power switch for the prevention of accidental switching by them. Never dismount, change or damage any parts of the machine and safety devices without permission.

Apply only origin QINGCHENG spare parts to the machine. We are not responsible for any loss or trouble caused by applying other spare parts or changing the machine without permission.

Wearing loose clothes, long hair, watches or ornaments may cause accidents (such as: being entangled by the moving parts). Therefore, operators must wear appropriate clothes, cap and take off the watch and ornaments.

Keep the vicinity of the machine clean and tidy. Trash (like oil stain or wood pieces) and obstacles may affect the safety of operation. Operators must wear safety goggles, safety veil and earplugs. Keep hands from in-feed area.

Start the machine after the dust collecting unit is working. Please be aware of the diameter of dust collecting pipe and air velocity and amount necessary for efficient dust collection (please refer to the instruction figure).

Don't feed more than one work piece at the same time. Never stand in line with the work piece while feed it into the machine.

Never lift the feeding device if there is any work piece inside the machine and the cutting tools are rotating. Otherwise, the work piece may be released and ejected out.

While the work piece is stuck during feeding, stop the feeding operation immediately. Before inspection, make sure the power is turned OFF and will not be

started accidentally, and all the movable parts come to a complete stop.

Use unbroken regular long pieces to push the stuck pieces out of the machine.

While the machine is running, never get close to the feeding chains for observation. Otherwise, work pieces or chips that are ejected out accidentally may lead to hazards to personnel safety.

Before leaving the machine, make sure the power is OFF and the machine will not start accidentally (by locking the main switch or posting up a notice).

The noise level of the machine is in conformity with the local regulations. If the noise level exceeds the regulation under some special conditions (such as special space, work pieces, cutters or spindle speed), the owner of this machine must provide auxiliary devices for noise control.

## 1-3 SAFETY RULES FOR TOOLS

①All the tools to be utilized on this machine must be in conformity with the safety standards of EN847-1:1997.

②All cutting tools have sharp edges and may cause personnel hazards even under condition of rest. Be careful and always wear safety gloves while touching tools. Stay away from cutting tools while they are running.

③The tools must be in conformity with the required specifications and parameters of the machine. Users should use cutting tools of good quality or purchase from QINGCHENG. Otherwise, the machine may be damaged.

④Before installing tools, clean and lubricate the middle ring and the plane of action of tools and spindles. All tools must be equipped with safety ring.

⑤The spindle nuts must be tightened securely, Make sure it will not loosen by itself.

⑥Before start operation of the machine, check the spindles by rotating them with hand and make sure they could rotate freely.

## 1-4 SAFETY RULES FOR CUTTING

The spindle speed of this machine reaches 4000 rpm and the motor power is 37 kw. The work pieces are fed by the chain block and enduring heavy counterforce while ripping..If the pressing rollers fail to clamp the work pieces firmly, the work pieces might be ejected out and cause serious hazards. Always make sure the pressing rollers are well positioned after changing the working height of the machine.

The chips may jam the anti-kickback fingers and cause them lose function. It is important to always keep the anti-kickback fingers clean and make sure they could

work normally. Before starting operation of this machine, make sure the anti-kickback fingers are not jammed by chips or other dusts.

**IMPORTANT NOTE: Operators shall wear leather apron and operate at the side of the machine. Never stand in line with the cutting direction.**

**IMPORTANT NOTE: For safety reason and precision sawing ,operator must guarantee the work pieces are in identical thickness ,and set the value of the reference meter of pressing roller same as the thickness .To prevent the chain worn, never feed in over thick piece.**

Never directly or indirectly touch the running parts and the work pieces being cut.

Before starting work, remove the foreign materials, such as metal and sands etc., from the work pieces.

Never feed two or more pieces into the machine at the same time.

The maximum thickness of pieces to be cut by this machine shall not exceed 120mm; the minimum length shall be over 300mm.

For untrimmed pieces, place wider face down to contact the feeding chains for cutting.

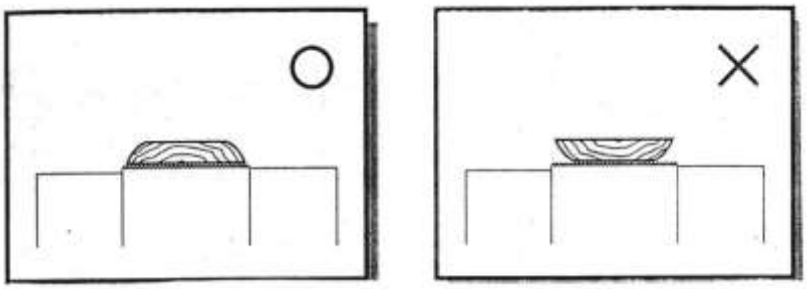

For pieces with a curved cross section, place the convex face down to contact the feeding chains for cutting.

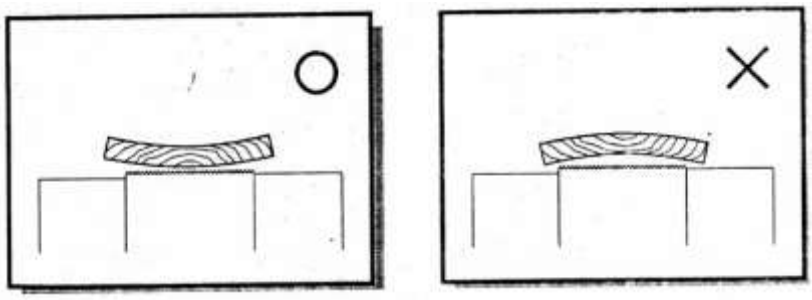

For pieces with a curved vertical section, place the concave face down to contact the feeding chains for cutting.

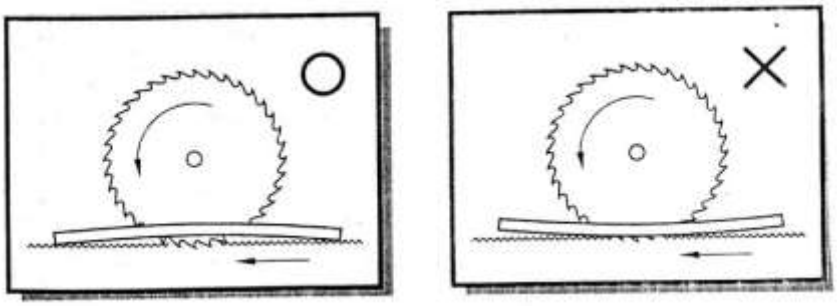

Choose proper saw blades according to the work pieces. Check the condition of the blades all the time and make sure they are not worn, damaged or stuck by chips.

While installing the saw blades, make sure the direction of the saw teeth is in accordance with the rotating direction of the spindle.

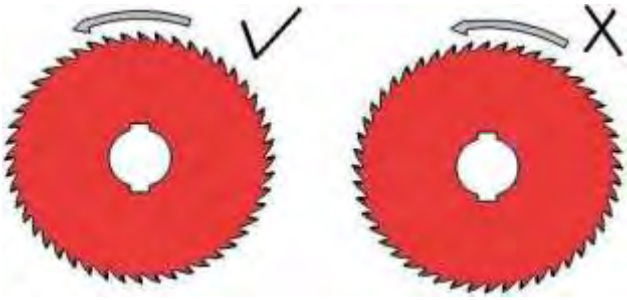

Never let the clearance between the feeding chain blocks being jammed by foreign material. Remove the chips from the feeding chain block by compressed air everyday.

## 1-5 OTHER SAFETY RULES

①Be aware of the sharp parts at the in-feed and out-feed ends that may cause damage, such as: Tool teeth, anti-kickback fingers and feeding rollers.

②Be careful while the safe cover is open or inching feeding mode is applied.

③Remove the chips and dusts while cleaning the machine.

④Only the clamping device and the spacer rings provided with the machine should be applied. Never use spacer rings that have clearance with the spindle. Never use worn tools.

⑤Apply appropriate in-feed table and transport rollers for loading work pieces.

## 1-6 SAFETY RULES FOR ELECTRICAL WORKS

Be aware of the following safety instructions while doing works in the control cabinet:

①Before touch any movable parts, make sure the main power is cut OFF and will

not be started accidentally.

②Only qualified electricians are allowed to perform the maintenance of electric system.

③Machine must be connected with earth wire to avoid creepage.

④After reinstalling or repairing electrical parts, all the safety devices (like the resistance of ground connection) should be tested again.

⑤Signaling devices (limit switches) and other electrical parts should never be damaged or removed from the safety devices.

**NOTE:**

**The connection between the main switch and the power supply must be reliable.**

**Never use aluminum wires or cables.**

**BVR power cable is recommended. Use additional metal sleeve at the end of the cable and securely tighten it.**

**QINGCHENG shall not be responsible for the damage of main switch caused by incorrect connection of power supply or the power cable not being connected reliably.**

## 1-7 NOISE LEVEL

The noise emission of this machine is over 85 dB while processing work pieces. It is necessary for operators to wear ear protection plugs or caps. Also, please be aware the following statement:

'These figures quoted are emission levels and are not necessary safe working levels. Whilst there is a correlation between the emission and exposure levels, this can not be used reliably to determine whether or not further precautions are required. Factors that influence the actual level of exposure of the workforce include the characteristics of the work room, the other sources of noise etc. i.e. the number of machines and other adjacent processes. Also the permissible exposure level can vary from country to country. This information, however, will enable the user of the machine to make a better evaluation of the hazard and risk.'

Before starting operation of the machine, all involved personnel must read through this manual and fully understand this manual. The supervisor shall be responsible for this.

## 1-8 SAFETY INSTRUCTION LABELS

Safety labels are attached on the machine and device for safety instructions and drawing attention for particular risks. Carefully read these labels and follow the instructions described there. Always keep the labels clean.

Some typical labels are listed below. (Labels not listed here are same important as the labels listed below.)

| Label | Explanation |
|---|---|
|  | ● High voltage power supply here. Do not open.<br>● Cut OFF the power supply for repairing and maintenance.<br>● Never touch any parts inside the cabinet with wet hand.<br>● Failure to do this may cause seriously hurt or death. |
|  | ● Keep distance to rotating tools. |
|  | ● Protect audition while operation. |
|  | ● Wear goggles and face guard while operation. |
|  | ● Never touch rotating tools, feeding wheels/rollers and driving devices. |
|  | ● Electric shock danger! |

# II. MAIN FEATUERS AND SPECIFICATIONS

## 2-1 Technical specifications

Max. working thickness ····· 170mm

Min. working thickness ····· 10 mm

Min. length of workpiece ····· 740 mm

Max. working width ····· 500 mm

Distance from post to the middle point of chain blocks · 455 mm

Max. diameter of saw blades ····· Φ505 mm

Min. diameter of saw blades ····· Φ355 mm

Bore diameter of saw blades ····· Φ80 mm

Saw spindle diameter ····· Φ60 mm

Install saw blade quantity----------6-15

Saw spindle speed ····· 2600 rpm

Saw spindle motor----------75kW□ 55kW□

Feeding motor ····· 5.5 kW

Feeding speed (frequency converter control) ····· 3 - 24m/min

Press roller unit elevating motor ····· 0.75 kW

Air source pressure----------0.3-0.6MPa

Compressed air need quantity----------0.05 $m^3$/min

Suction hoods diameter ····· 2×Φ150 mm

Dust suction system air need quantity----------3800$m^3$/h

Dust suction system air wind speed----------30m/s

Work table height ····· 820 mm

Work table size ····· 2150X940mm

Overall dimensions ····· 4850X2020X1880 mm

Net weight ····· 4250kg

**Because of the request of safety:**

When operate the machine, the specification of the work piece must strictly observe the technical parameter of this operation instruction, strictly prohibit working exceed the specification. Otherwise if there is any machine and person safe accident, our company will assume no liability for these.

**The processing dimensioning request of multi-blade rip saw**

| Saw blade diameter | Work-piece thickness | Saw blade quantity | Remark |
|---|---|---|---|
| φ405~φ455 | 30~50 | 15 | |
| | 50~80 | 9 | |
| | 90~130 | 6 | |
| φ455~φ505 | 130~150 | 5 | |
| | 150~170 | 4 | |
| Selected power parameter： When processing 10mm work-piece, the needed power of every saw blade is 1.0KW | | | |

# 2-1 FEATUERS

### Chain blocks feeding system, variable feeding speed change:

Chain blocks feeding system guarantees the straightness of ripping. Feeding speed is able to be freely set from 4-30 m/min, providing the most convenience.

### Safety anti-kickback devices

To guarantee the personnel safety and work efficiency, as the result of a long time research, three section of anti-kickback devices are adopted at the feeding direction and safety plate and cover are adopted at the side of machine, providing the most complete protection.

### Automatic mandatory lubrication device

The central lubrication system ensures a permanent oil film between the chain and guide rails. The warning lamp will light when there is insufficient oil in the oil tank, and the feeding chain will stop running automatically. This fully ensures the service life of the feeding chain and guide rails.

### Powerful saw spindle motor

This machine is equipped with a power saw motor and could also choose 55KW or 75KW optionally.

### Saw spindle motor overload protection

When the saw spindle motor overload and the load is too large, the feeding track will fall down the speed or stop automatic, to prevent the workpiece damage the spindle and saw blade.

# III. INSTALLATION AND TEST OF MACHINE

## 3-1. Hoisting the machine

Dismount the bolts fixing the machine on the wood case seat and use high strength steel wires or chains to hoist the machine according to the following figure. When hoist the machine, please notice to keep the balance of the machine. When the machine fall to close with the installation ground, please fall the machine slowly and don't afoul with the ground strongly.


## 3-2 Installation

### 3-2-1 Space request

Have the abundance installation space.

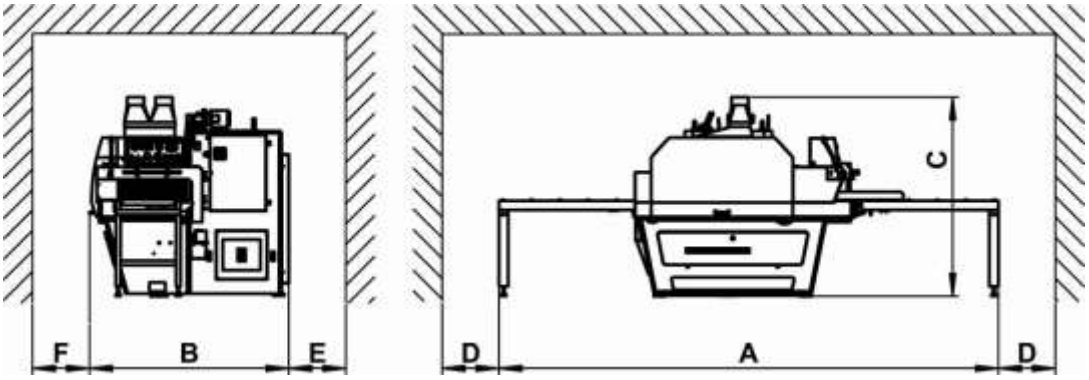


| Mode | A(mm) | B(mm) | C(mm) | D(mm) | E(mm) | F(mm) |
|---|---|---|---|---|---|---|
| QMJ145H | 4850 | 2020 | 1880 | 3000 | 3000 | 3500 |

### 3-2-2 Installation site selection

1) The machine must be installed in solid floor, the floor must be plane. There should be adequate space around the machine in order to convey the wood. There is foundation heel block with the machine, put this heel block under the plane adjusting snail.

2) The in-feed side of the machine don't towards the alleyway or people always come by place.

3) The place is close to the electrical.

### 3-2-3 Installation electric safety proceeding

1) wiring

①The cable specification which is used by wiring should be correspond or exceed than the capability and specification which is indicated in electricity instruction.

②Wiring should be far away from switchboard of strong disturb device( bonding machine. high frequency quenching device and so on).

③Wiring should be operated by specialty technique people.

2) Earth lead

Earth lead resistance must be below 100Ω, generally speaking one machine signal earthing（drive into earth peg） is the best .

Earth lead is best to lay signal and should be the shortest far form the wiring.

3) Environment request

Generally speaking , please ensure the follow environment condition:

- Allow electrical voltage: within3~AC380V±5%
- Electrical frequency: 50Hz±2Hz
- Environment temperature: 0℃~45℃
- Environment humidity: below 90% ( no condensation)
- Atmosphere condition: no abnormity dust.. no acidity. causticity gas . salt and so on.
- Avoid direct light. heat radiation in order that temperature rise in some part.
- Libration: Never make the machine have any abnormity libration.
- Height above sea level: Below 1000m.

## 3.3 Level adjust

1) After install the machine on the floor well, begin to level adjust. Put the foundation heel block which is collocated with machine under the level adjust snail.

2) Put the precision gradienter on the link joint, measure three parts, front, end and middle.

3) Adjust level adjust snail, until the link join is plane. Error=±0.1mm/1000mm. At the last lock the nut.

## 3.4 Clean

Back out transportation protector, eliminate the rust preventive oil from exposed metal parts.

**Don't use the flammability solvent , don't arbitrariness take off any parts from the machine.**

## 3-5 Electric connect

This machine adopt 3 phase 380V, 50Hz alternating current. Customer should prepare 4 copper core wire to connect the electrical source and earth wire to electrical box, notice the earth wire should connect credibility.


Electric connect should be operated by specialty electrician worker who are familiar with location electro-regulation.

Wrong electric connect may cause the bosom of electro-equipment short circuit and make strongly damage to electric parts.

Check, confirm electric power grounding device, protect operator to avoid get an electric shock.

Use the wire which is accord with international safety specification to connect with the electrical source of the machine. Power input wire should adopt copper core whose min. section diameter ≥50mm$^2$ (When adopt the 55KW spindle motor)(When adopt 75KW spindle motor the copper core min. section diameter ≥70mm$^2$)

Must install a suitable no fuse switch between the main electrical source and this machine, prepare to cut off the machine electrical source when you don't use this machine.

| Mode | Total capacity | Inlet wire cable | Recommend peripheral switch | Remark (Spindle motor) |
|---|---|---|---|---|
| MJ145H | 60KW | ≥50mm$^2$ | 120A | 55KW |
| | 80KW | ≥70mm$^2$ | 160A | 75KW |

## 3-6 CONNECTON OF THE AIR SUPPLY(SEE THE PICTURE)

Connect the pressure air pipe with pneumatic device ( air supply dealing duplex cylinder)， the Max. air supply pressure is 8 kgf/cm², the air coming in pipe diameter is 8mm. The pressure air only can be the air which is dryness、lubrication and pressure.

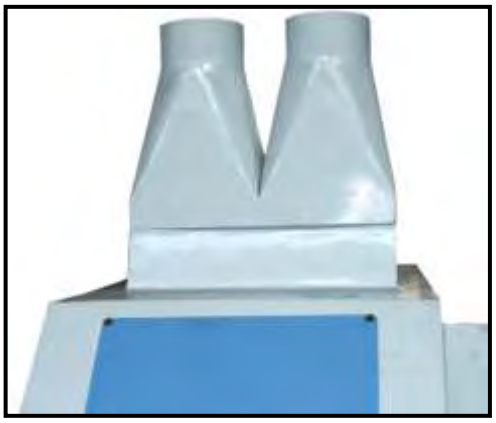

## 3-7 CONNECTON OF THE DUST COLLECTION (SEE THE PICTURE)

Two suction outlet 2XΦ150 mm could connect two flexible dust collection pipes of diameter 6 inches. The air velocity for dust collection shall be higher than 30 m/sec. The average air amount of one pipe shall be at least 1900 m$^3$/h.

## 3-8. STARTING TEST

After the machine is installed according to the above regulations and make sure there is no obstacle around the machine, perform starting test.

1. Close all the safety protect hood and the protect switch is in the condition of normally work. Make sure the power is ON, then check whether the power indication lamp lights.

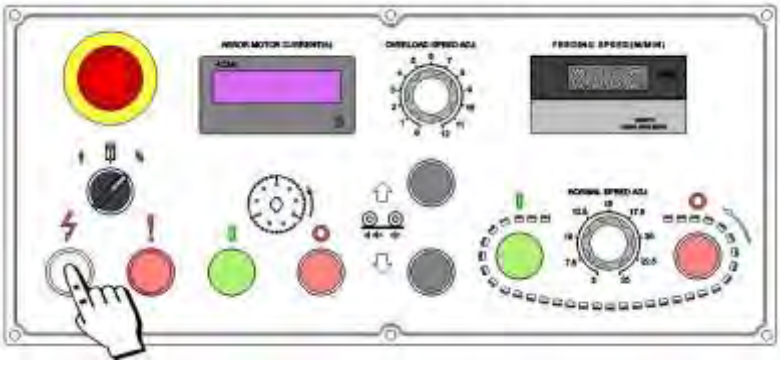

2. Press down the Saw spindle start button and the saw spindle will be started slowly. Then check the rotating direction of the saw spindle and make sure it rotates counterclockwise. Otherwise, cut off the power immediately and stop the machine. Change two phase cables and restart again.

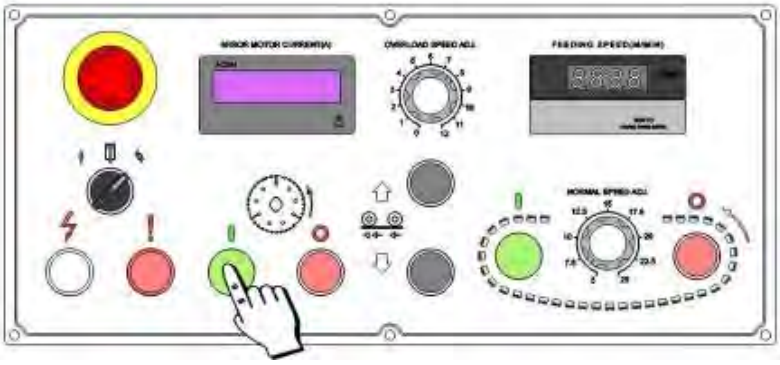

3. After about 20 – 30 seconds, an Y-△ starter will lead the saw spindle to rotate at the normal work speed and the green indication lamp of the Saw spindle start button will light.

4. After make sure the machine has been started normally, push the stop button to stop the machine.

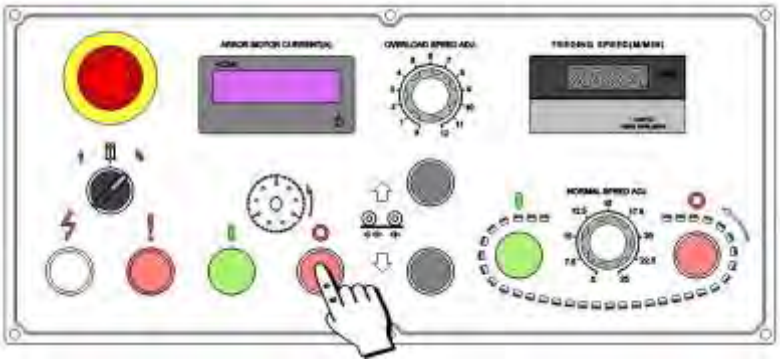

# IV. MACHINE FIGURE AND MAIN OPERATION PART

## 4-1 MACHINE FIGURE

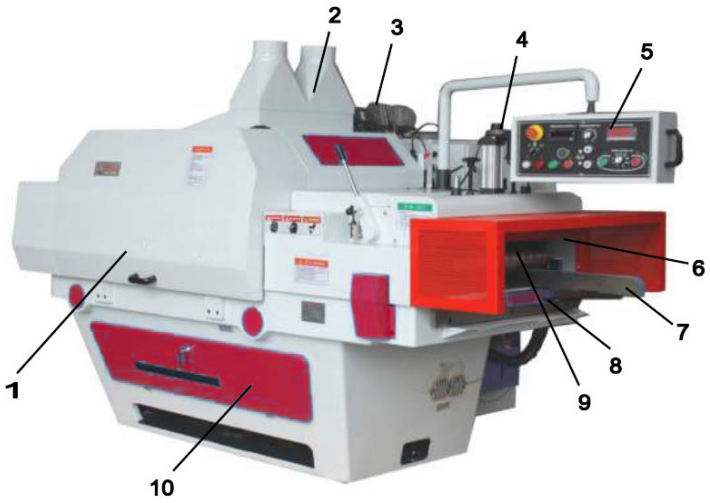


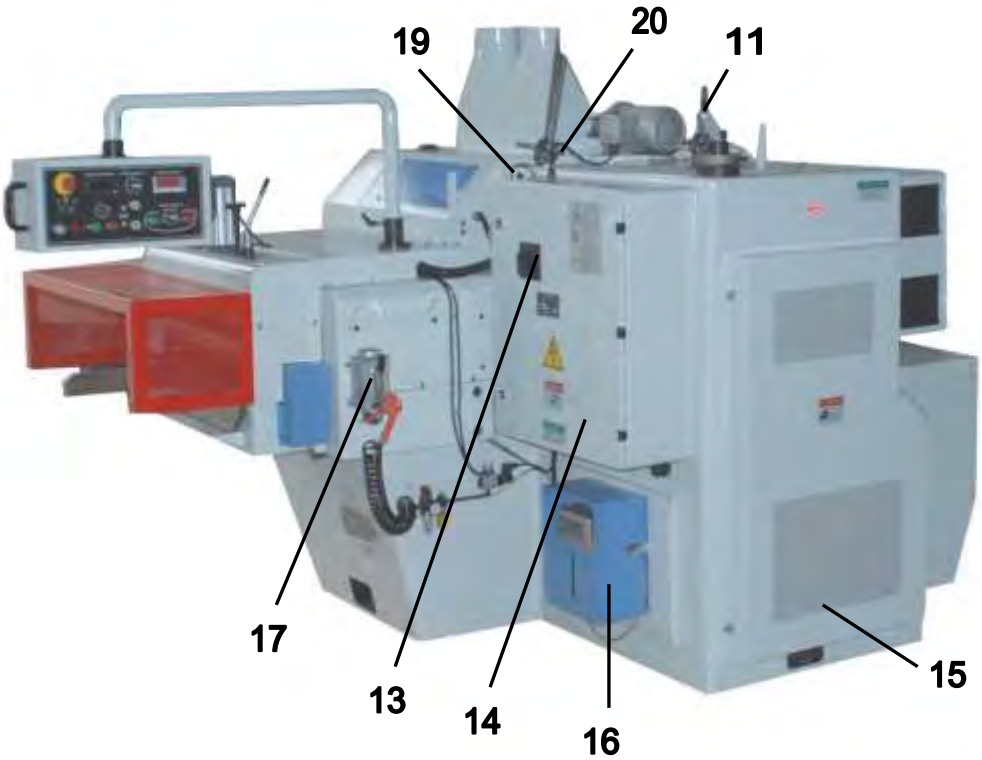

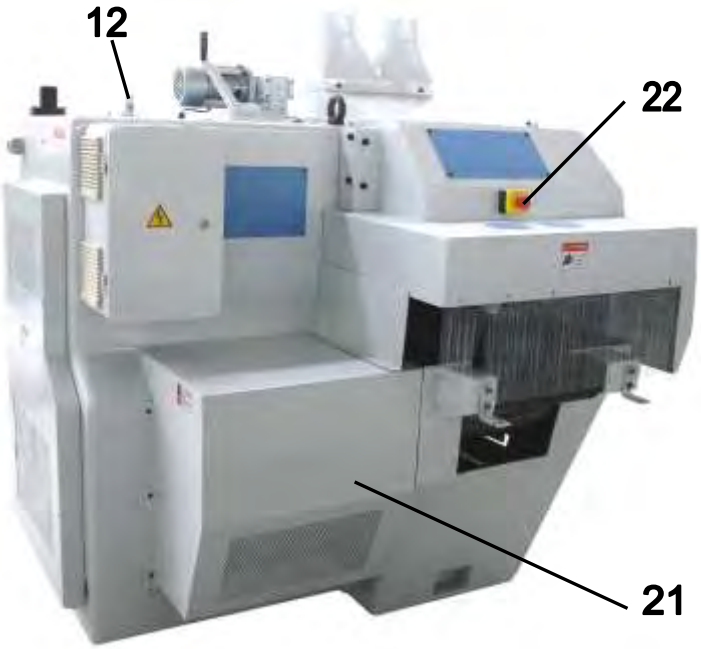



1- Outer protection hood
2- Suction pipe connector
3- Elevating motor of pressing rollers
4- Saw blade sleeve fixing seat
5- Operation panel
6- Cutting width indication rod
7- In-feed fence
8- Fixing handler of in-feed fence
9- Anti-kickback piece
10- Chip removal case
11- Saw spindle elevating handler
12- Saw blade location guide ruler
13- Main power switch
14- Door of electric cabinet
15- Door of saw spindle motor
16-Automatic lubricator pump
17-Hand operation lubricator pump
18-Anti-kickback piece seat
19- Press roller box position limit switch
20- Lifting hook
21- Feeding chain blocks motor cover
22- Back head emergency stop switch
23-Assitant feeding frame (optional)

## 4-2 OPRERATION PANEL AND BUTTON FUNCTION

| Button panel | 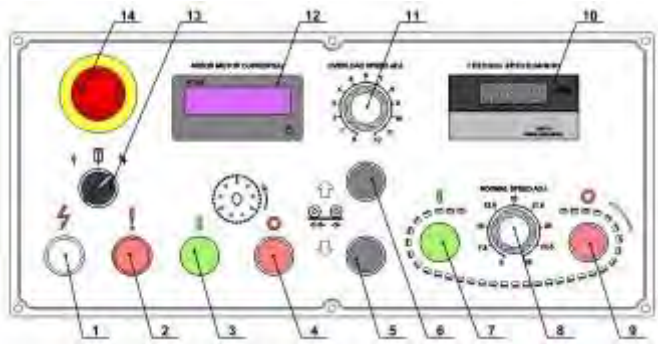 | |
|---|---|---|
| No. | Name | Function introduction |
| 1 | Power indication lamp | Put through the machine electrical source，loose the emergency stop button ( two part), the motor is not over loading, this lamp will light |
| 2 | Protection device indication lamp | Uplift the anti-kickback device which is beside the in-feeding，or open the spindle door，this lamp will light。 |
| 3 | Saw spindle start button | After press this button, spindle motor Y shape will start up, after about 20 seconds, it will change to △ running，this button indication light will be lighting. |
| 4 | Saw spindle stop button | After press this button, the spindle motor stop running。 |
| 5 | Pressing rollers fall button | After this button，the pressing roller will fall, loose it the pressing roller stop falling. |
| 6 | Pressing rollers lift button | After press this button, the pressing roller will lift, loose it the pressing roller stop lifting。 |
| 7 | Feeding chain start button | After start-up the spindle motor，press this button to start-up the feeding chain, at the same time the lubrication pump will start-up to running automatic。 |
| 8 | Normal speed adjusting knob | After start-up the feeding chain, adjust this knob to change the feeding speed. Quicken up by clockwise, gear down by anticlockwise。 |
| 9 | Feeding chain stop button | After press this button, stop the feeding chain |
| 10 | Feeding speed display panel | Display the feeding speed（M/MIN）。 |
| 11 | Low speed adjusting knob | Feeding track speed setting values after spindle motor overload protecting. General it is half of the normal speed setting value |
| 12 | Main spindle ampere meter | Electric current indication for spindle motor running。In working please notice this electric current，don’t exceed the rating current of spindle motor。 |
| 13 | In-feed press roller working choice switch | Dextrorotation this switch to open position, press roller will automatic down press the assistant feeding. When the thickness of the work-piece is below 50mm, levorotation this switch to close position. |
| 14 | Emergency stop button | After press this button , the machine will stop all the working |

# V. ADJUSTMENT

## 5-1. **Installation of the auxiliary supporting**

The auxiliary support adopts the hydraulic pressure tailstock, the hydraulic pressure tailstock is designed and manufactured by patented technology, and it can realize the ceaseless coordination with the saw spindle under the situation of without extra replenishment grease. It guarantees the saw spindle far-end stability, and increases the working accuracy.

The hydraulic pressure tailstock 2 is fixed into the support plate 1, and passes the bolt 3 and the clamp 4 fixes in the support 10.

5.1.1 Rises and falls the saw spindle, firstly, loosen the bolt 3 (each 1 in left and right side), after adjustment, lock again.

5.1.2 When assembling and dismounting saw blades and pressure plate, firstly, dismount the tailstock support. The operating procedure and step are as follows:

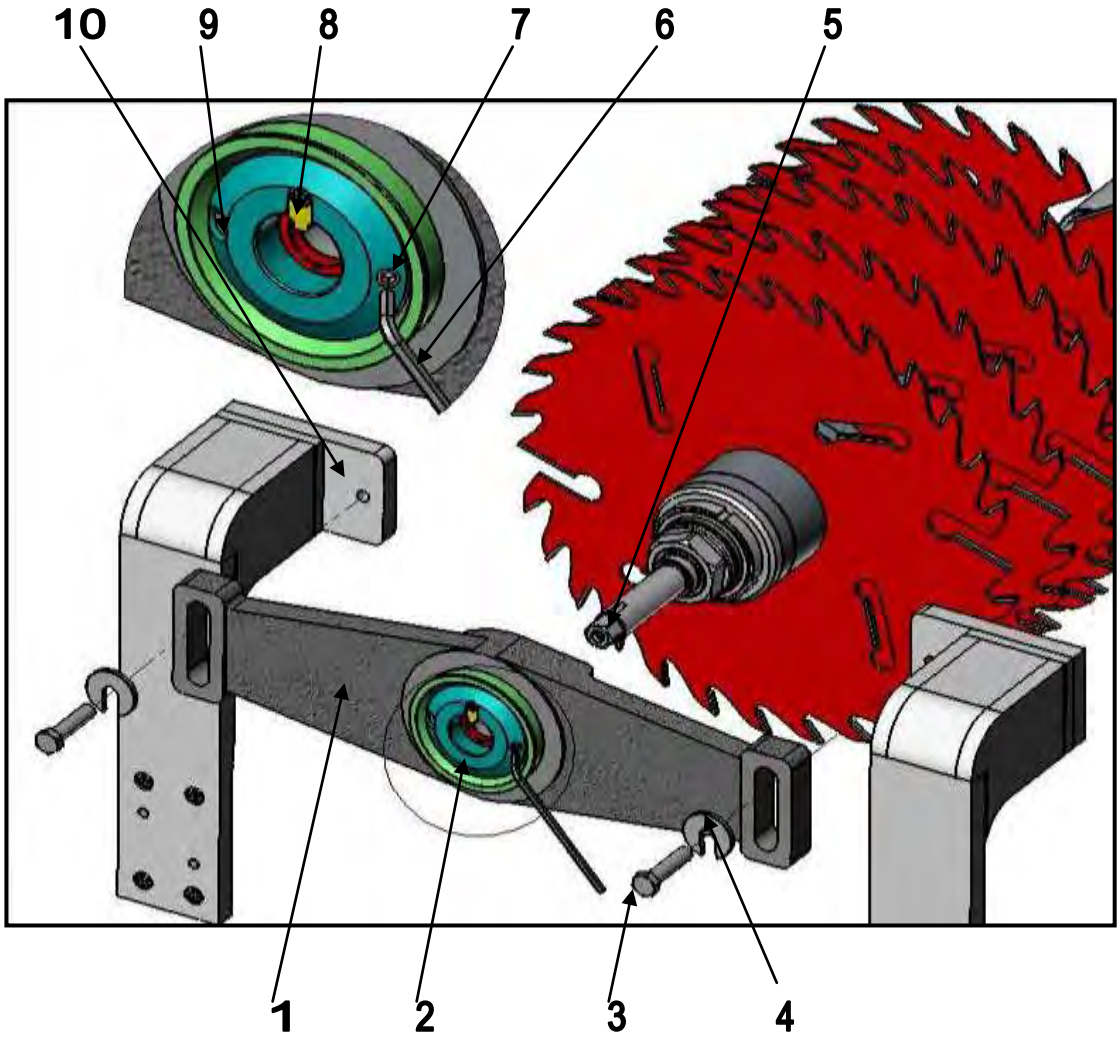

A: Use the inner hexagonal spanner 6 to rotate hydraulic pressure tailstock 7 in the direction counterclockwise two to three rounds, making the hole of the hydraulic pressure tailstock and the saw spindle relaxes (Make sure to remember that revolving turn cannot be too many, cannot turn out the piston completely, otherwise liquor in the tailstock will divulge, hydraulic pressure tailstock will discard and cannot play normal role);

B: Loosen the bolt 3, and dismount the auxiliary support and the hydraulic pressure tailstock, then you can assembling and dismounting saw blades and pressure plate

C: After install saw blades and pressure plate, you need reinstall the auxiliary support and the hydraulic pressure tailstock. First, install the hole of the hydraulic pressure tailstock and the saw spindle; make the tailstock card key 8 and the saw spindle key slot alignment, then push the hydraulic pressure tailstock and the mounting panel, until the mounting panel touches the fixed mounting panel. Then tighten the bold 3, and use the inner hexagonal spanner 6 to rotate hydraulic pressure tailstock 7 in the direction clockwise two to three rounds, making the hole of the hydraulic pressure tailstock and the saw spindle tightening.

## 5-2. Replacement of the pressing plate

Note: Firstly, dismount the auxiliary support (See Ist part of IX.)

### 5-2-1. Replacement of short pressing plate (for long piece):

Open the door of saw spindle case and loosen the two bolts indicated in the pictures below, so that the pressing plate could be loaded to the fixing bracket.
The fixing nuts do not need to be dismounted completely while replacing the pressing plate. Just loosen the fixing nuts to insert or pull out the pressing plate. After replacement, make sure the nuts are tightened firmly.

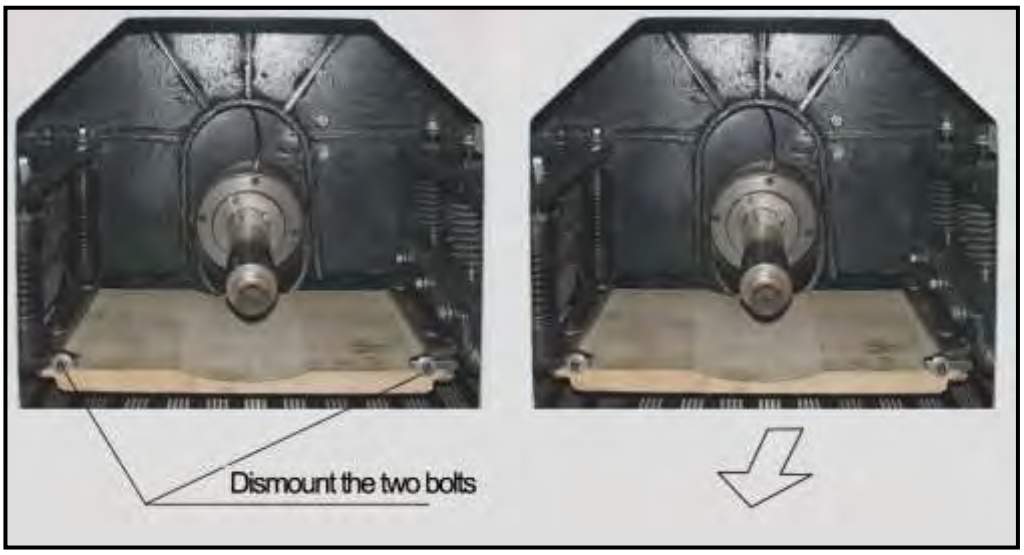

### 5-2-2 Replacement of long pressing plate (for short piece):

1） Adjust the press roller box to 30mm position, pull down the right block chip board, see the picture.

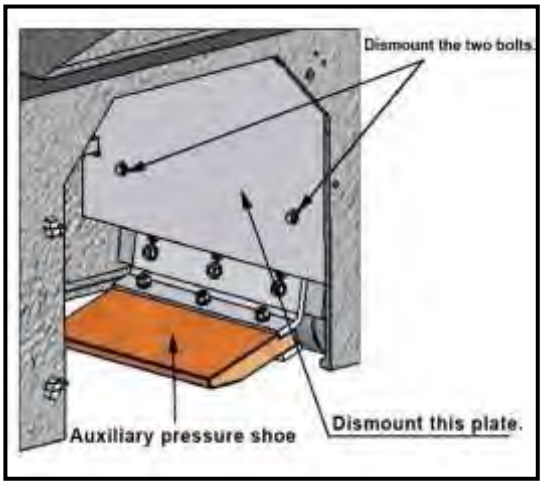


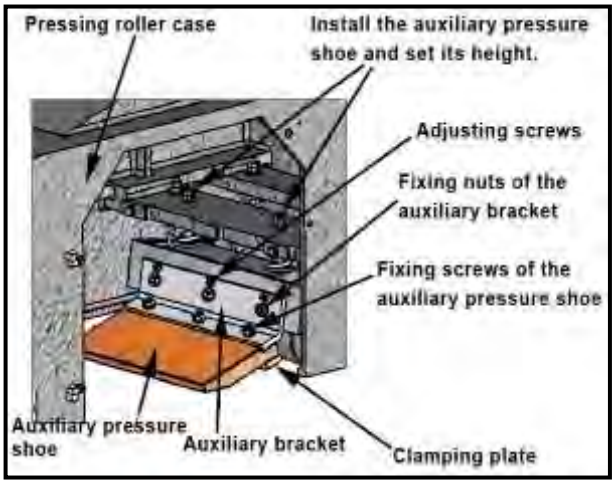


2) Use the attached pressure wood press board and fasten nut to clamp the attached pressure wood board in the attached pressure wood support plate, then install this discreteness on the pressure wood roller bracket.

3) Adjust the adjusting top thread (three ) which is on the attached pressure wood support board, make the distance from the lowest of attached pressure wood board to the work table is 37mm. (because the falling head between the conveying chain piece and the work table is 7mm)

After adjust well, lock it, also lock the nut of the adjusting top head, completing the adjusting. See the picture.

### 5-2-3 Selecting of the short and long pressing plate

1) When the thickness of workpiece is below 100mm, user could only select the long pressing plate for the short and long piece, but the short piece must be fed in continuously.

2) When the thickness of workpiece is excess 100mm, ripping long and thick piece will bring much sawdust. For guaranteeing the quality of saw ripping and protecting saw blade from being damaged, user must select the short pressing plate.

The pressing plate must use tough and complete solid woods or solid wood joint board and be made according to the size below.

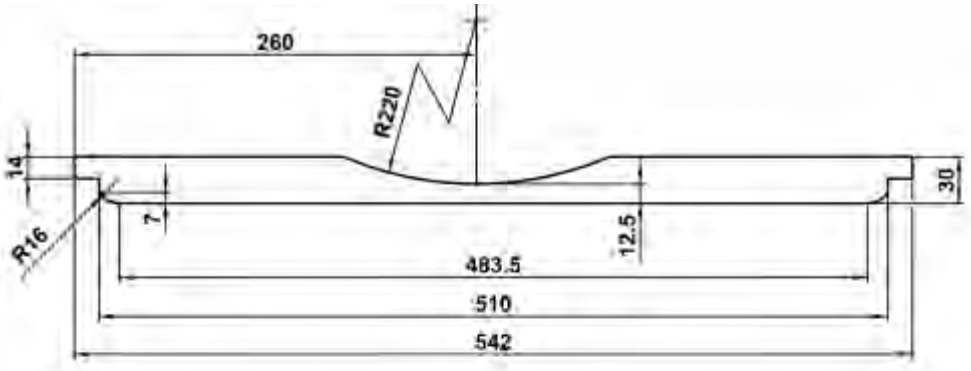
260
R220
14
30
7
12.5
R16
483.5
510
542

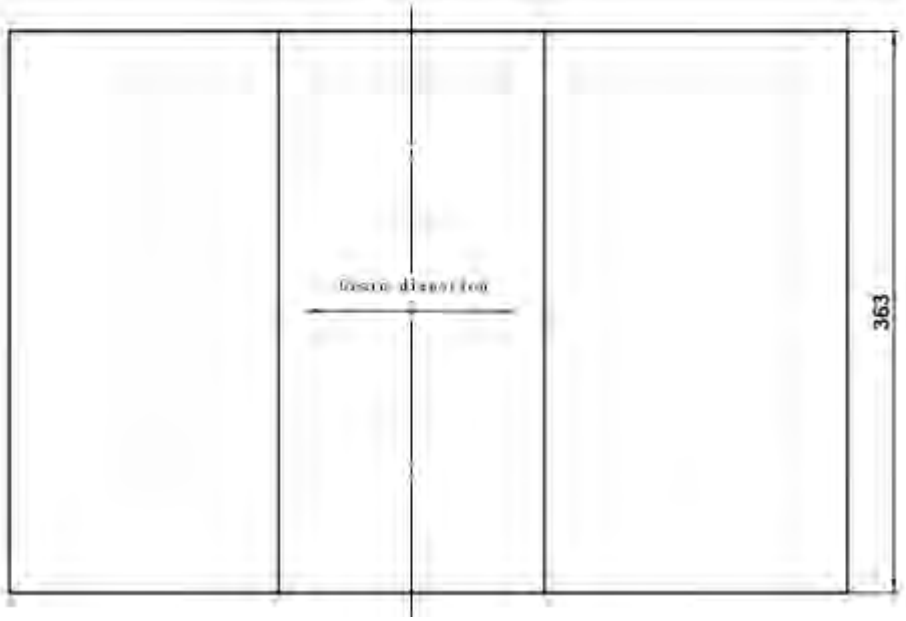
363

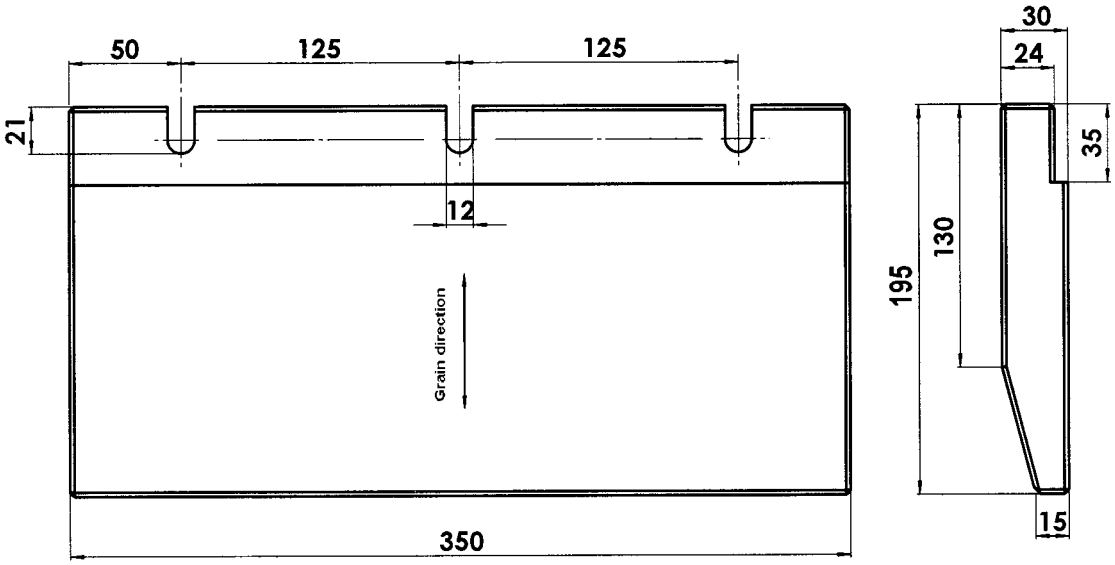
50
125
125
21
12
Grain direction
350
30
24
35
130
195
15

## 5.3 Preparation of the saw blades

Note: Firstly, dismount the auxiliary support (See Ist part of IX.)

There are two methods to install or replace the saw blades with the sleeve:(Note: this machine can be installed 4 to 12 saw blades, when use the biggest saw blade to work the max. thickness work-piece, only you can use 4 saw blades. When use the small saw blade to work more thin work-piece, you can add or reduce the quantity of saw blade according to the working material quality.

### 5-3-1 While the sleeve set is not locked on the saw spindle:

(1). Erect the sleeve on a table and install proper spacers and saw blades to it according to the working requirements. Before install the spacers and blades, make sure the edge of the spacers and the clamping point of saw blades are clean. Make sure all saw blades have identical diameter and teeth direction (See figure below). Then lock the sleeve nut firmly.

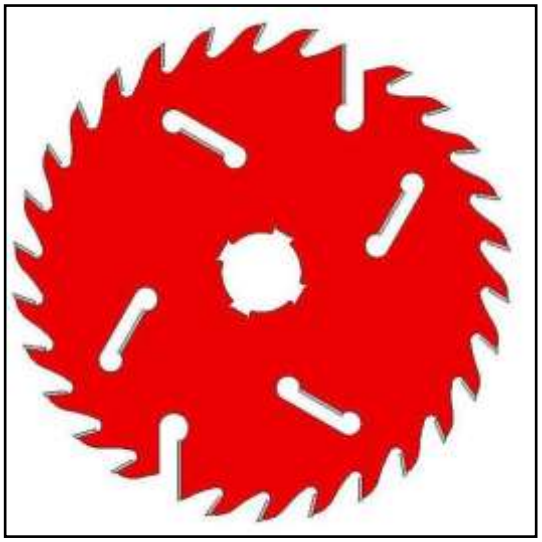

(2). Clean the contact area of the sleeve and the saw spindle, the bore of the sleeve and the saw spindle surface by clean cloth. Make sure no stains, chips or dust left. Otherwise, the saw blades may wobble and vibrate and affect the working accuracy seriously.

(3). Turn the fixing pin of the saw spindle elevating handler and fit it into the place of LOOSE to loose the handler. Rotate the saw spindle elevating handler clockwise to lift the saw spindle to the limit. Then turn the fixing pin and fit it into the closest hole to fix the spindle at the highest position. Push the Pressing rollers fall button to lower down the pressing rollers case until there is enough space to fit the sleeve set to the saw spindle.

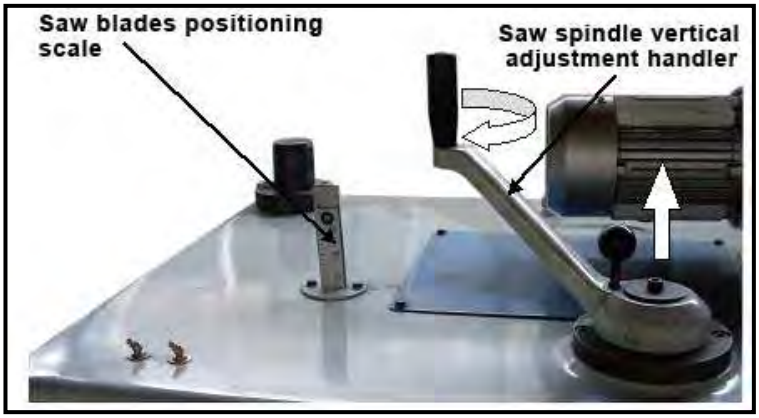


(4) Make sure the groove of the sleeve (A) firmly fit into the key at the end of the saw spindle (B) while installing the sleeve to the spindle.

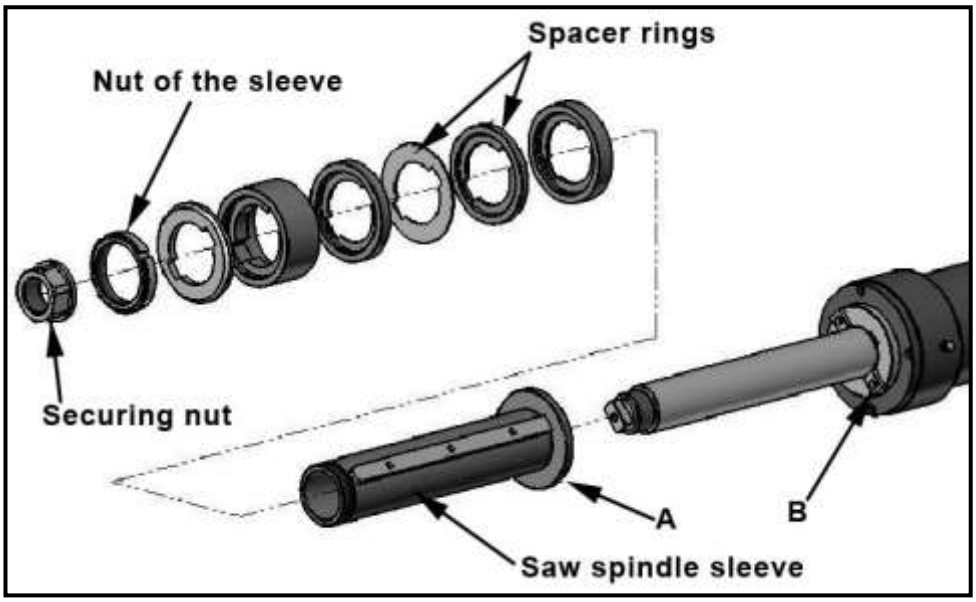


(5). Use the following three special spanners to lock the sleeve nut and the saw spindle nut respectively.

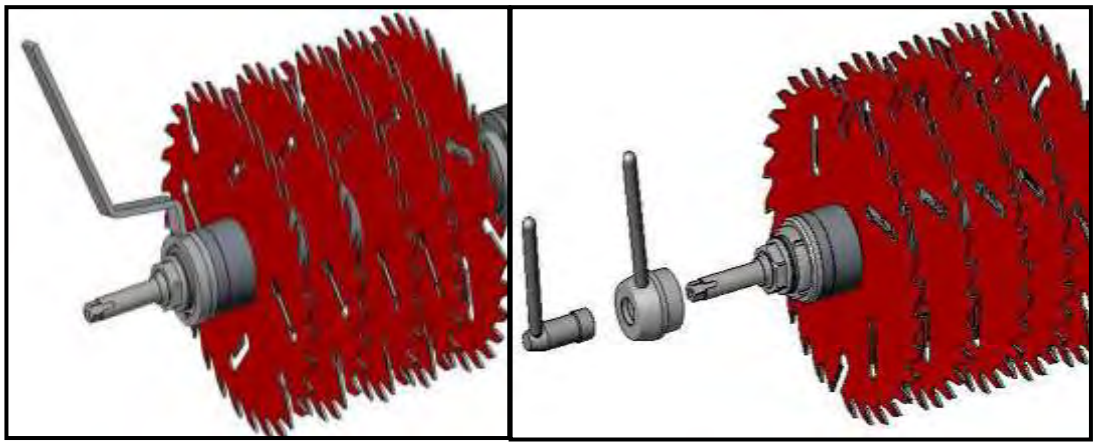

### 5-3-2 While the sleeve set is locked on the saw spindle:

If the saw blades is stuck in the pressing plate, operators must lift the saw spindle and lower down the pressing plate seat to separate the saw blades and the pressing plate.

(1). Separate the saw blades and pressing plate according to the third step of the first condition. Then loosen the saw spindle nut and sleeve nut and dismount the saw blades and spacers by applying saw spindle nut spanner, sleeve nut spanner and the saw spindle stuck spanner.

(2). Replace the saw blades and spacers according to working requirements. Make sure the edge of the spacers and the clamping point of saw blades are clean. Make sure all saw blades have identical diameter and teeth direction.

(3). Lock the sleeve nut and the spindle nut respectively according to the fifth step of the first condition.

## 5-4. Check the safety devices

(1). Close the saw spindle case door. Check and make sure the safety switch of the door and handler is in the correct position. Check and make sure the anti-kickback fingers falls in a row to the direction of the chain blocks and could not be lifted easily.

(2). Make sure the power is ON and the emergency stop button rests.

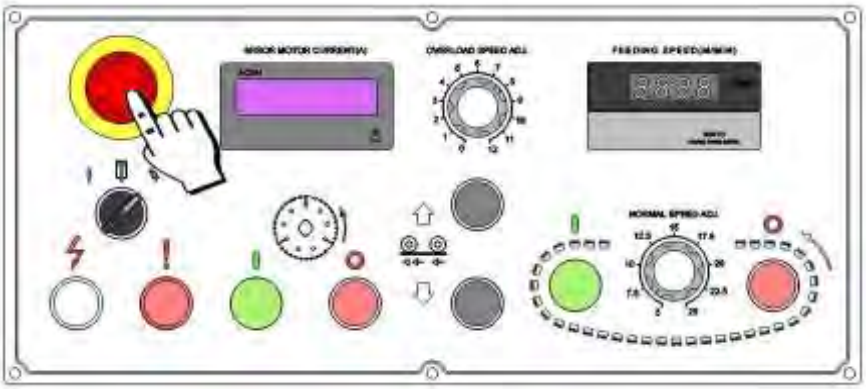

## 5-5. Saw spindle positioning

Note: Firstly, release the auxiliary support (See Ist part of IX.)

Make sure the pressing plate and the saw blades sleeve set have been installed correctly. Then start the saw spindle and slowly rotate the saw spindle elevating handler counterclockwise to lower down the saw spindle, until the saw blades locating meter indicates the correct diameter of the saw blades (for example, if the diameter of the saw blades is 12'', make adjustments until the meter indicates 12''). After adjustment, make sure the fixing pin has been locked in the closest hole. After adjustment, reset the lock pin to lock the saw spindle.

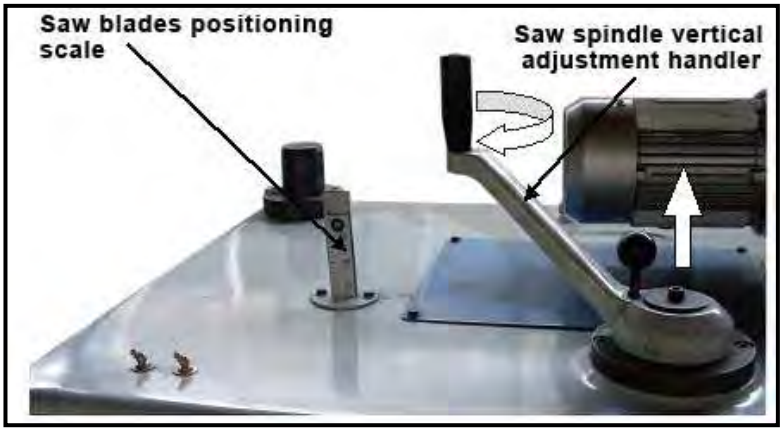


## 5-6. Adjustment of the pressing rollers

Push the Pressing rollers lift button or the Pressing rollers fall button and hold it to lower down or lift the pressing rollers, until the value of the reference meter is about 1-2 mm less than the thickness of the work pieces. If the pressing rollers fall too lower, wood pieces will cause the chain seriously worn even broken.

For example, assuming the thickness of the work pieces is 100mm, adjust the height of pressing rollers to be 99.5-100.5mm. ( In case the pieces are not regular in thickness, please first lift the pressing rollers to 110mm and then lower down to 99.5-100.5 mm, to prevent the bolt of pressing plate breaking.

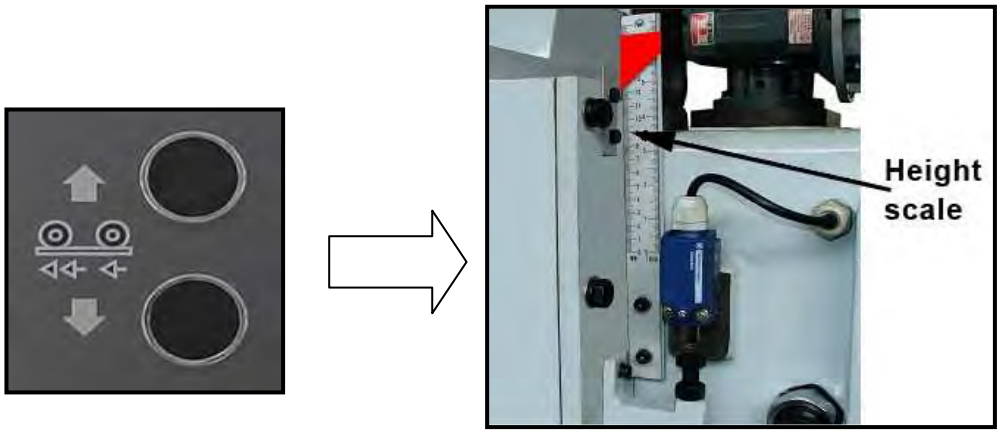


## 5-7. Adjustment of the in-feed fence

The fence is positioned by the handler. It should be placed with space from the first saw blade. The space depends on the straightness of the edge of the work pieces. The more rough is the edge of pieces, the more space should be left.

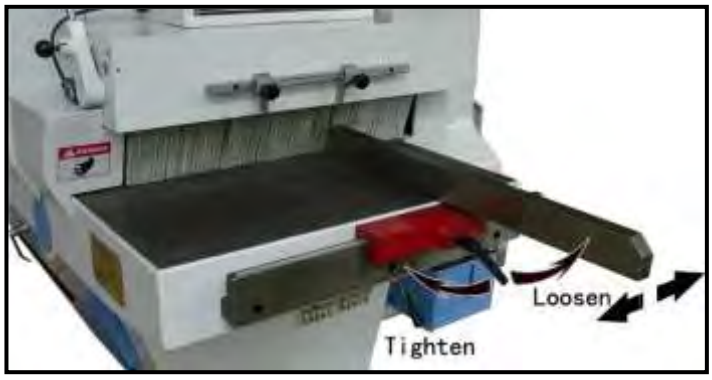

## 5-8. Adjustment of auxiliary feeding pressing-rollers

This machine is equipped with auxiliary feed-in and feed-out device, to help the transportation of work pieces. After starting the saw spindle and feeding motor, turn the pressure feed roller switch on the operation button panel to the position ON. When the machine check out wood piece(the thickness of the work pieces must be more than 50 mm) at the feed entrance, the pneumatic hold-down mechanism will carry the top pressing roller down to press wood piece to help bottom auto roller feeding. When wood piece leave feed entrance, the pneumatic hold-down mechanism will auto rise back for next feeding. In order to shorten the back distance of pneumatic hold-down mechanism, adjust the two limit screws of two sides of the pneumatic hold-down mechanism (adjust to keep the same height of the two as far as possible). The adjustment make sure the height between top pressing roller and wood piece is about 10mm when the pneumatic hold-down mechanism back. After adjustment, tighten the locknuts firmly.

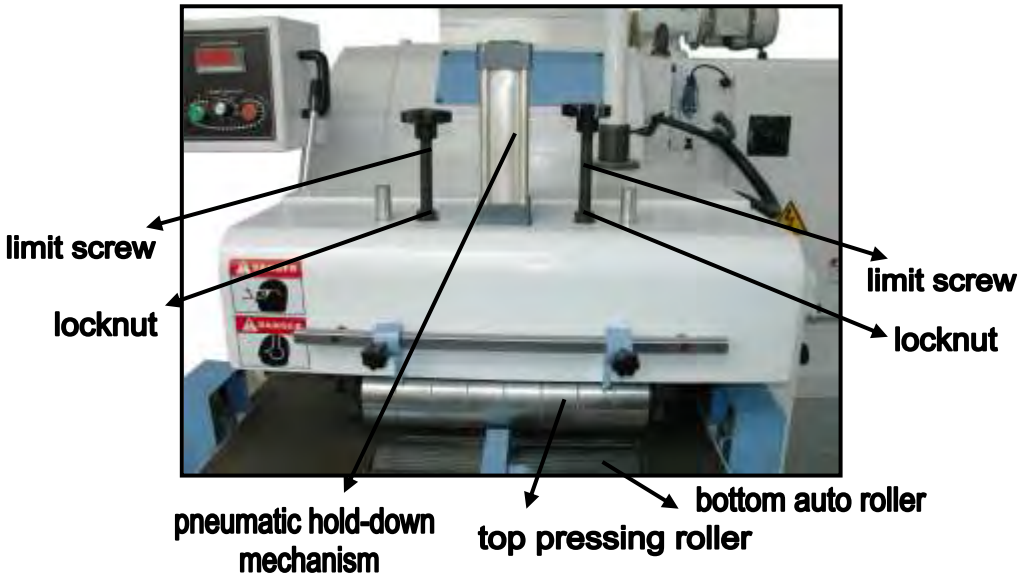


## 5-9. Starting the saw blades

Press down the Saw spindle start button to start the saw blades.

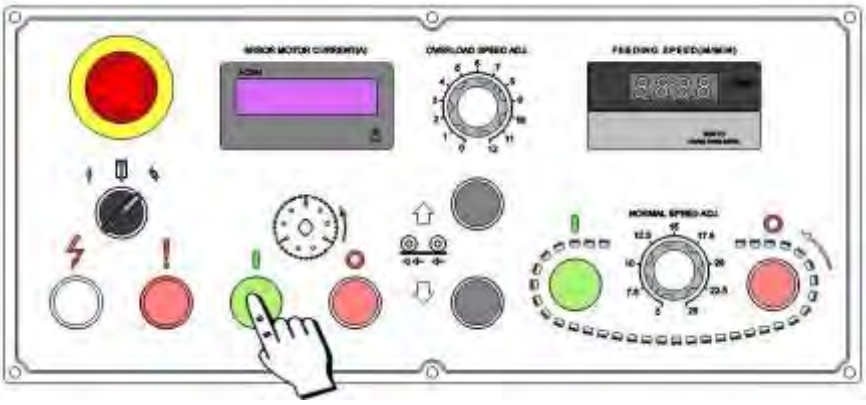

## 5-10. Starting the feeding chain

Press down the Feeding chain start button to start the feeding chain. Adjust the speed change knob to get a desired feeding speed. The feeding speed depends on the material, thickness, and finish requirements of the work pieces, sharpness and quantity of saw blades.

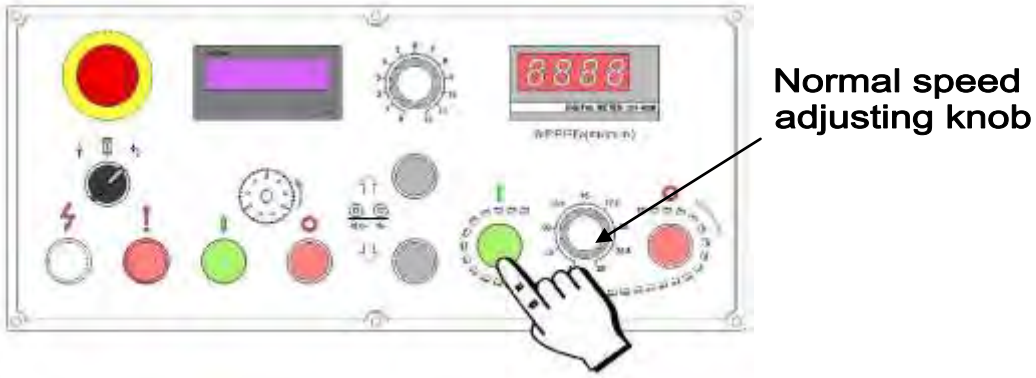


## 5-11. Feeding in

(1). To reach the most accurate lengthwise straightness of pieces, please try to guarantee the pieces are in identical thickness(the thickness different of work pieces in 5mm), without bend or excessive distortion. The thickness of work pieces should not exceed 170 mm.

(2). To guarantee the pressing plate could fully press the pieces, the length of work piece should not be shorter than 740 mm.

(3). Place the work piece on the work table and press it to the fence firmly. Then push the work piece into the chain blocks and the pressing rollers for ripping. Once the work piece enter the machine, operators should release hands immediately. Even if the work piece does not enter in a straight line, the operator should never attempt to push the work piece to a straight line.

(4). Keep checking the readout of Ampere meter (380V, 75kw, 140A) all the time to learn the load of the saw spindle motor and turn the Feeding speed change knob to acquire a proper feeding speed.

Please refer to the chart below for the proper current of the saw spindle motor:

| SAW SPINDLE MOTOR POWER | VOLTAGE | | | |
|---|---|---|---|---|
| | 220V | 380V | 415V | 440V |
| 30KW | 100A | 57A | 55A | 50A |
| 37KW | 125A | 71A | 66A | 62A |
| 45KW | 150A | 85A | 80A | 74A |
| 55KW | 190A | 103A | 100A | 95A |
| 75KW | 246A | 140A | 127A | 123A |

Please be aware that the current value displayed on the ammeter shall not exceed the value shown in this chart.

(5) This machine is equipped with auxiliary in-feed and out-feed tables, to help the transportation of work pieces. Please refer to the drawing below:

(6) This machine is equipped with the overload protection for the saw spindle motor. During operation, operators could read out the load of the saw spindle motor from the ammeter on the button panel.

If the lamp S1 on the ammeter lights, it means that the load is over the value S1. Then the feeding chains will slow down automatically to a preset low speed (This preset low speed is able to be adjusted by the Low speed adjusting knob on the button panel.). While the load of the saw spindle motor decreases, the feeding chains will speed up automatically. While the light S1 dies, the feeding chains will be restored automatically to the normal feed speed (The normal feed speed is able to be adjusted by the Normal speed adjusting knob on the button panel).

If the lamp S2 on the ammeter lights, this means that the saw spindle motor is overloaded and the current is over the rated current. Then the feeding chains will stop automatically.

**NOTE:**

**The preset low speed value shall be smaller than 50% of the normal feed speed.**

**The current real feed speed is displayed on the feed speed displayer.**


## 5-12. Fall down the feeding speed setting regulation

(1) Determining the proper value of S1 and S2

Cut a sample work piece for a test run and take the displayed value as reference.

S1= ('Displayed value' + 10% to 20%)

S2= ('Displayed value' + 20% to 40%)

For example: If the ammeter displays 70A during the test run, then set S1=77 to 84;

set S2=84 to 98.

(2) Setting the value of S1 and S2

For example, S1=82.0A; S2=98.0A:

a) Take off the cover of the ammeter. (Picture 1)

b) Press the setting button S. The number '00' starts blinking. (Picture 2)

c) Press button □ and then number '51' starts blinking. (Picture 3)

d) Press button D for one time, then '92.0' is displayed (Picture 4). This is the value of S1.

To adjust it, press □ and then the number '0' starts blinking.

Press □ again and then the number '9' starts blinking. Press the button □ to set the value.

Press □ again and then the number '2' starts blinking. Press the button □ to set the value.

After setting, press D again to accept the adjustment.

e) Press button D until the number '54' is displayed. (Picture 5)

f) Press button D again and then the number '102.5' is displayed (Picture 6). This is the value of S2. Refer to the methods described above for adjustment.

g) Press button D until the number '59' is displayed (Picture 7). Then press button D again and the number '99' will be displayed (Picture 8). Press button D again and the number '99' will start blinking. Then wait for about 3 seconds to finish setting.

Picture 1


Picture 2


Picture 3


Picture 4


Picture 5


Picture 6


Picture 7


Picture 8

**NOTE:**

If the value of S1 is set to be too small, the feeding chains will slow down frequently, which may lead to the loss of production.

If the value of S1 is set to be too large, the controller can not protect the saw blades and the machine effectively.

After S1 is properly set, if the lamp S1 still lights, this means the saw blades is seriously worn. Please sharpen the saw blades.

The chart below shows the setting of the parameters of the ammeter: (These parameters are properly set before shipment. Never change them without consulting your QINGCHENG representative)

| Para-meters | Preset value before shipment | Para-meters | Preset value before shipment | Para-meters | Preset value before shipment |
|---|---|---|---|---|---|
| 00 | | 07 | 31 | 53 | 00 |
| 01 | | 08 | 123.0 – 082.0 (55KW)<br>169.0 – 113.0 (75KW ) | 54 | 102.5 (55KW)<br>140.0(75KW ) |
| 02 | | 09 | 99 | 55 | 000.0 |
| 03 | 200.0 | | | 56 | 03 |
| 04 | 1888.8 | | | 57 | 11 |
| 05 | 0-10 | 51 | 092.0 (55KW)<br>127.0 (75KW) | 58 | 00 |
| 06 | 9600 | 52 | 000.0 | 59 | 99 |

# VI. ELECTRIC SYSTEM

## 6-1. Electric control instruction

### (1) Preparation of the power source

This machine adopts 380V 50Hz 3ph AC power supply ( Check the ground wire and make sure it connects reliably ) and make preparation for starting test.

### (2) Starting the machine

First, turn the handler on the electric cabinet to the position ON (vertical) and release the Emergency stop buttons SB0、SB1(In front and back total two ). Then the power indication lamp HL1 will light. Close the door of the saw spindle cabinet and reset the anti-kickback fingers to working place. Protection device indication lamp HL2 will put out, now the machine can be operated normally.

Press the Saw spindle start button SB3. The saw spindle motor will be started in 'Y' mode and then after the time relay in the electric cabinet reaches the preset value, it will switch to run in '△' mode. In this moment, the start button will light.

Start the feed motor only after the saw spindle motor is started normally. After starting the feed motor, users are able to change the feed speed within the range from 3 to 24 m/min by turning the Normal speed adjusting knob on the button panel. The Feed speed displayer displays the current feed speed. As soon as the feed motor is started, the automatic lubrication pump will be started simultaneously to ensure the lubrication of the feeding chains and guide rails. This lubrication pump provides oil shortage protection. If the lubrication pump lacks lubrication oil, it will stop the machine automatically. Make sure there is sufficient oil in the tank of this pump all the time.

This machine is equipped with overload protection devices for the saw spindle motor, which is effective in the protection of the saw spindle and saw blades. Please refer to the previous descriptions for details.

This machine is equipped with the overload protection for the saw spindle motor to protect the saw spindle and saw blade. If the load is over the preset value, the feeding chains will slow down automatically to a preset low speed (This preset low speed is able to be adjusted by the Low speed adjusting knob on the button panel.) (The preset low speed value shall be smaller than 50% of the normal feed speed.) While the load of the saw spindle motor decreases, the feeding chains will speed up automatically.

Press the Pressing roller DOWN/UP button to change the height of the pressing rollers. During adjustment, be aware of the position of the saw spindle, in case that the pressure shoe collides with the saw spindle, which might cause serious accidents. Never lift the feeding device if there is any work piece inside the machine and the cutting tools are rotating. Otherwise, the work piece may be released and ejected out.

After starting the saw spindle and feeding motor, turn the pressure feed roller switch SA

to the position ON. When the photoelectricity mechanism in the machine check out wood piece(the thickness of the work pieces must be more than 50 mm) at the feed entrance, the top pressing roller down to press wood piece. When wood piece leave feed entrance, the top pressing roller will auto rise back for next feeding. When the thickness of the work pieces be less than 50 mm,(less than the height of in-feed guide fence) the top pressing roller can not work, so please turn the pressure feed roller switch SA to the position OFF.

## (3) Stop

Press the Feed motor stop button to stop the feed motor. Pressing the Saw spindle stop button will stop both the spindle motor and the feed motor. Pressing the Emergency stop button will stop the whole electric system.

## (4) Interlock protection

The circuit breaker QF1 is for the general short circuit protection and overload protection of the whole electric system. The thermal relay FR1 is for the overload protection of the saw spindle motor. The thermal relay FR2 is for the overload protection of the feed motor. The thermal relay FR3 is for the overload protection of the elevation motor of the pressing rollers.

The circuit breaker QC1 and QC2 are for protection of the control circuit. The pressing roller case is protected by interlocked vertical adjustment with two limit switches SQ3 and SQ4. While the door of the saw spindle cabinet is open, the safety limit switch SQ1 will act and all the motors can not be started. While lifting the anti-kickback fingers at the in-feed entrance, all the motion of the machine will be stopped. Limit switch SQ5 works as thickness limit, by which the machine will stop automatically if the thickness of work pieces entering the working area is over the required thickness.

To open the electric cabinet for maintenance or repairing working, users must turn the handler to position Reset (horizontal) and then open the door of the electric cabinet.

1) All the electric work must be performed by skilled electric technicians.

2) If mechanical or electrical failure occurs, start the machine again only after the cause is found and the failure is eliminated.

3) The electric parameters have been properly set before shipment. Never change the parameters without consulting your QING CHENG representative.

4) Check the connecting point of the electric system periodically, at least once three months.

5) Check the temperature of the motor regularly while the motor is running and eliminate any possible trouble.

## 6-2. Electric principle figure

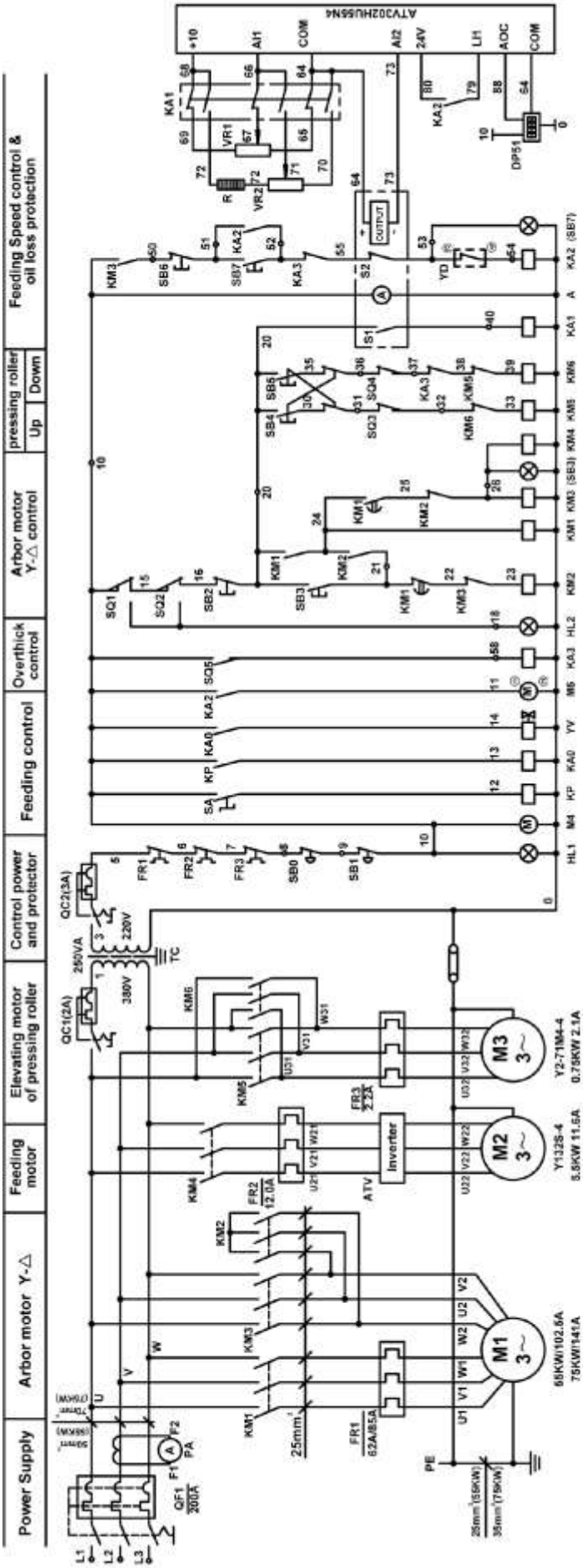


Note: M4: Cool motor of the inverter box, M5: Motor of the lube pump.
①,②,③,④are the inner connecting terminal of the pump; ③,④ are the Level switch of the pump,
SQ1: Door switch of the saw spindle case, SQ2: limit switch of lifting the anti-kickback fingers,
SQ3: Lifting limit switch of pressing rollers, SQ4: Descending limit switch of pressing rollers,
SQ5: In-feed thickness limit switch.

**MJ145H ELECTRIC DIAGRAM**

Note: 1. The feed motion will be stopped automatically once there is not sufficient oil in the pump.
2. The electric parameters have been properly set before shipment. Never change the parameters !

## 6-3. Electric original part list

| No. | Model | Name | quantity |
|---|---|---|---|
| QF1 | NSC100B3080 rating current 200A | breaker | 1 |
| KM1,3 | LC1-D8011/9511C AC220V (55/75KW) | Alternating current contactor | 2 |
| KM2 | LC1-D5011/6511C AC220V (55/75KW) | Alternating current contactor | 1 |
| FR1 | LR2-D3361/3365C (55/75KW) | thermal relay | 1 |
| KM4 | LC1-D18M7C AC220V | Alternating current contactor | 1 |
| FR2 | LRD-14C 7～10A | thermal relay | 1 |
| ATV | ATV302HU40N4 AC380V | transducer | 1 |
| KM5,6 | LC1-D09M7C AC220V | Alternating current contactor | 2 |
| FR3 | LRD-07C 1.6～2.5A | thermal relay | 1 |
| TC | JBK3-250VA 380/220V | transformer | 1 |
| QC1,2 | C32N C2,C3 | breaker | 1 |
| | LAD-S2 1～30s | Air time delay caput | 1 |
| PA | RCT-35 current rate 200/5A | Current mutual inductor | 1 |
| SB0 | XB2-BS542C red fungus caput | Emergency stop button | 1 |
| SB1 | LA38-01Mxs/203 circumrotate replacement fungus button | Emergency stop button | 1 |
| SA | LA38-10X2/203 black short handle | knob | 1 |
| KP | BEN10M-TFR bijection mode relay output | Photoelectricity switch | 1 |
| YV | MVSC-220-4E1-AC220V | Solenoid valve | 1 |
| SB2,6 | LA38-01/203 red | Stop button | 2 |
| SB3,7 | LA38-10D/2034 AC220V green | Start-up button with light | 2 |
| SB4,5 | LA38-11/203 black | Inching button | 2 |
| HL1 | AD11-22/41-7GZ AC220V white | Indicator light | 1 |
| HL2 | AD11-22/41-7GZ AC220V red | Indicator light | 1 |
| SQ1 | ZXM-301 | Travel switch | 1 |
| SQ2 | ZLN15G030 | Travel switch | 1 |
| SQ5 | ZXM-703 | Travel switch | 1 |
| SQ3,4 | XCKP2102G11 | Travel switch | 2 |
| KA0,3 | MY2NJ +installation seat AC220V | Middle relay | 2 |
| KA1,4 | MY4NJ +installation seat AC220V | Middle relay | 2 |
| VR | WX-112 4.7KΩ | Potentiometer | 1 |
| A | DMA-AAYA AC220V | Alternating ammeter | 1 |
| R | 5KΩ 1/4W | High quality carbon resister | 1 |

# VII. MAINTENANCE

Always turn OFF the power supply before performing maintenance and inspection. This must be exercised with extra care. Otherwise, serious hazards may be caused.

## 7-1. Cleaning

Keeping the vicinity of the machine clean and tidy helps to guarantee the safety while working and will extend the service life of the machine. The detailed cleaning method follows:

(1). Keep cleaning the chips on the feeding chain by compressed air all the time. Chips on the chain may sop the lubricating oil and cause the chain and rail seriously worn. Users are required to clean off all chips on every chain block.

(2). Users could check the chain cleaning brush and six oil nozzles for lubrication of the chain and rail, by opening the chip removal case. These are important parts for protection of the chain and rail and extension of their service life. Never let them being covered by chips, especially the nozzles. If the nozzle is covered by chips, lubricating oil could not be dropped to the rail and chain. Insufficient oil will cause the two expensive parts, rail and chain, to be seriously worn.


(3). Metal and sand, etc. will damage the rail and chain too. Clean the work pieces before starting ripping.

(4). Keep checking the dust collector all the time, making it always at its best.

(5). Clean all the stains and chips away while performing periodical lubrication maintenance.

(6). Users should prepare a periodical maintenance manual and perform periodical maintenance strictly to keep the machine at its best.

## 7-2. Lubrication

Performing lubrication maintenance periodically is the necessary method to keep the working accuracy and service life of the machine. Users must strictly exercise the following instructions checking the machine's condition periodically and performing correct lubrication.

**1) Be aware of the action of the indication bar of the distributor during operation. In normal conditions, the indication bar will stick out when the lubrication system engages pressure. The indication bar will get back when the pressure of the lubrication system is removed. If some lubrication points are stuck, the corresponding indication bars of the distributor will act abnormally. In this case, operators must stop the machine immediately. Only after complete inspecting of the machine and getting rid of the problem, could the machine be started again for work. Never operate this machine without sufficient and well lubrication. Otherwise, the guide rail of the machine will be damaged seriously.**

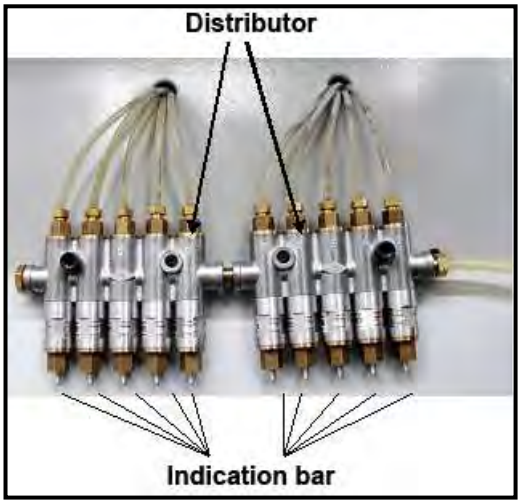


2) Before everyday operation, check the oil tank for the chain and rail. Keep sufficient oil in the oil tank. If there is not sufficient oil in the tank, the machine will stop automatically. Please replenish oil immediately. Please replenish with extra care of cleaning. Never let any foreign material enter the tank.

The following lubricating oil is recommended:

| Application | ISO code | Cst@40℃ | Brand | | | |
|---|---|---|---|---|---|---|
| | | | China Petroleum | Mobil | ESSO | SHELL |
| Lubricating Oil | VG-68 | 68 | Slideway oil 68 | Vectra No. 2 | Febis K68 | Tonna T68 |

**Note: Keep the lubricating oil with extra care of cleaning. Never use polluted oil. Never use recycled oil. Always use new oil for lubrication**

Dismount the oil filler cover indicated by the arrow in the figure below and replenish oil until the oil takes 80% of the tank. Be careful not to over fill. Otherwise the lubricating oil may be polluted by stains and dust.

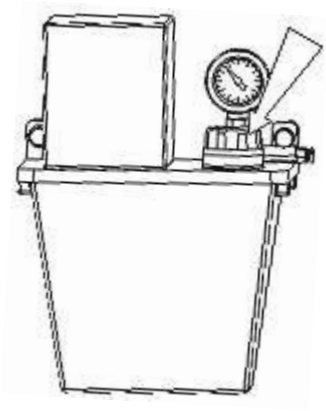

3) Adjustment of the feeding chain lubrication oil supply

This machine adopts inner hiding microcomputer thin oil lubrication pump. The oiling quantity can be changed by adjusting the oiling “intermittent time”.

Must strictly operate as the following steps when adjusting (please refer to the oil pump operating instruction.)

The method of adjusting the “intermittent time”:

Press the “▲” or “▼” in the bottom of the “intermittent (minute)” continued, after the light on the left side of the “lubrication (second)” and the other light on the left side of the “intermittent (minute)” blink together. When press “▲” once, the set value of “intermittent (minute)” will add 1, when press “▼” once, the set value of “intermittent (minute) will reduce 1. After adjust to the setting value, wait until the light on the left side of the “lubrication (second)” and the other light on the left side of the “intermittent (minute)” isn’t blinking, it is OK.

The method of adjusting the “oiling time” is as the up item.

The “oiling time” has been set to 12 seconds, and the “intermittent time” has been set to 8 minutes when in our factory, please don’t adjust and change at will under the general condition.

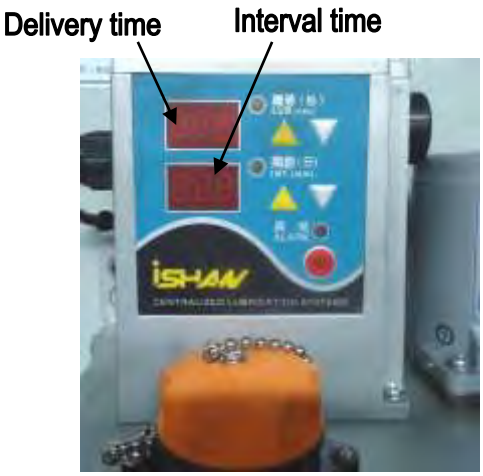


**NOTE**

**The chain and the rail must be kept fully lubricated. Before starting work, check and make sure the oil tank is sufficient of oil.**

**The oil pump has automatic protection against oil shortage. If there is not sufficient oil in the tank, the power will be cut off automatically and the saw spindle will stop automatically.**

4) Before everyday operation: (Use Slideway oil 68 )

Lubricate the slide rail of the pressing rollers seat. Just drop oil on the surface of the two slide rail for about 1CC for one time.


5) Every 250-300 working hours

Every 250-300 working hours, supply grease by grease gun. Before supplying grease, fully clean the grease nozzle and gun to prevent foreign material entering the bearings with the grease and damaging the bearings.

The following grease is recommended:

| Application | Control item | Cst@40℃ | Brand | | | |
|---|---|---|---|---|---|---|
| | | | China Petroleum | Mobil | ESSO | SHELL |
| Grease | Bearings | NLGI No.2 | Multi-purpose grease | Mobillux2 | Estan No.2 | ALvania No.2 |

**Note: Keep the grease with extra care of cleaning. Never use polluted grease. Never use recycled oil. Always use new oil for lubrication.**

The location of the grease nipples are below:

(1). There are two grease nipples on the top of machine frame near the back. They are for lubrication of main spindle.

（2）Open the back cover of the machine, there are grease nipples on the joint of the bracket and the elevating screw of the bracket.


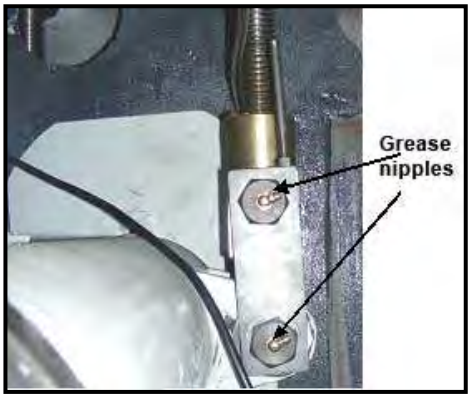


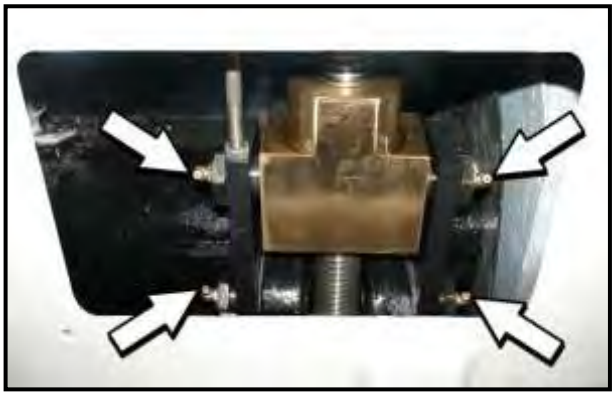

(3). On the top of saw spindle case, there is one grease nipple（the left figure below） to lubricate the elevating screw mandrel nut（the right figure below）of pressing rollers seat near the saw spindle.

Note：In order to guarantee the service life of the elevating system of pressing rollers seat, please supply grease to the grease nozzle before everyday operation or changing saw blades.


### Change the gear oil in the gear box of the feeding chains:

After first 300 working hours, clean the gear box completely and change the gear oil. Then change the oil every 2500 working hours. To change the oil, take off the steel cover on the gear box. Then open the filler port to refill lubrication oil into the gear box


**(NOTE: Some types of gear box are import and do not need to change the oil or supply grease. Please consult you local QINGCHENG representative for details.)**

The following lubricating oil is recommended:

| Application | ISO code | Cst@40℃ | Brand | | | |
|---|---|---|---|---|---|---|
| | | | China Petroleum | Mobil | ESSO | SHELL |
| Lubricating Oil | VG-460 | 460 | HD460 | Mobilgear 634 | Spartan EP:460 | Omala 460 |

## Change of the gear oil for the reducer of the pressing rollers seat:

1)Before working, please remove the bolt on the cover of the filling port.

2)Before working, please supply oil from the oil filler port until the oil level exceed the half height of the window.

3)After the first 100 working hours, fully clean the reducer of the pressing rollers seat and change the gear oil. Then change the gear oil every 2500 working hours.

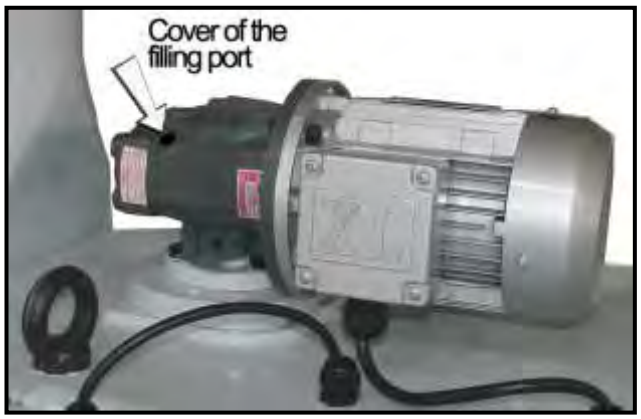

The following lubricating oil is recommended:

| Application | ISO code | Cst@40℃ | Brand | | | |
|---|---|---|---|---|---|---|
| | | | China Petroleum | Mobil | ESSO | SHELL |
| Lubricating Oil | VG-320 | 320 | HD320 | Mobilgear 632 | Spartan EP:320 | Omala 320 |

## 7-3. Adjustment and replacement of the belts of the saw spindle

After the machine is used for some time, the belts for transmission of the driven force will get loose and affect the transmission efficiency. It is necessary to increase the distance between the spindle pulley and the motor pulley to keep the belts tensioned.

This machine adopts an adjusting screw to adjust the distance between the pulleys.

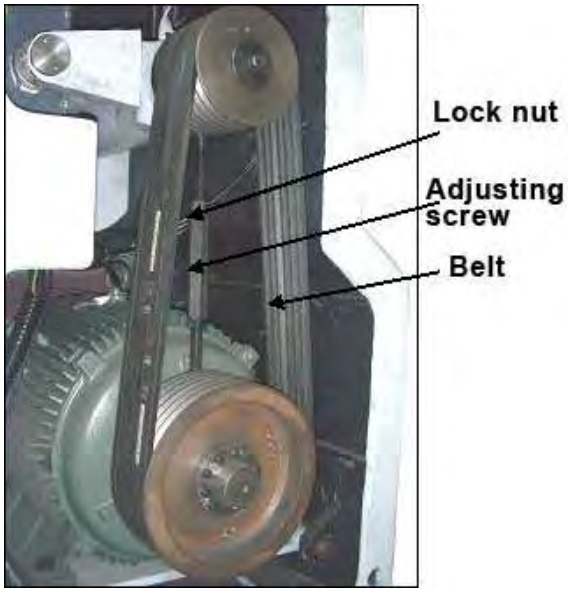


For adjustment or replacement of the belts, use a spanner to release the lock nut and then turn the adjusting screw properly (clockwise to release and counterclockwise to tension). After adjustment, tighten the lock nut securely.

After replacement of the belts, tension the new belts after the first 4 working hours. Then tension them again after 8 working hours. After this, check and tension them every 200 working hours. If the belts are worn, replace them immediately. Please use belts produced by one manufacturer and in one production serial number. Never use new belts and old belts at the same time.

The specification of the belts used by this machine is Thin V-belt 5V-800, 6pc.s

## 7-4. Adjustment and replacement of the belts of the feeding chains

Adjust the tension by the two nuts shown below. For new belts, tension them after the first 4 working hours. Then tension them again after 8 working hours. After this, check and tension them every 200 working hours. If the belts are worn, replace them immediately. Please use belts produced by one manufacturer and in one production serial number. Never use new belts and old belts at the same time.

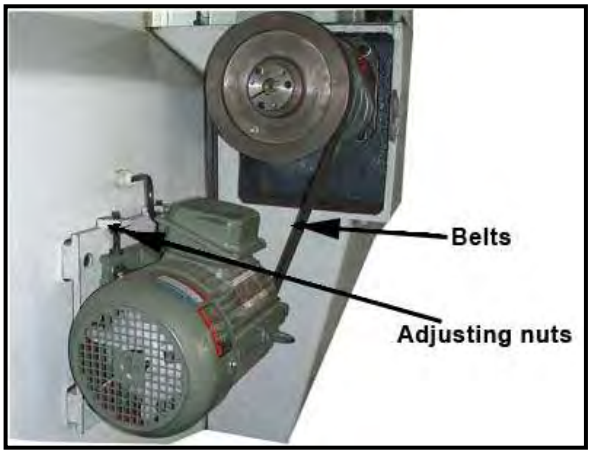


The specification of the belts used by this machine is Thin V-belt A-45, 2pc.s

## 7-5. Adjustment of the in-feed straightness

If the work pieces always slide to one side during feeding and affect the finished precision, please refer to the following picture for adjustment:

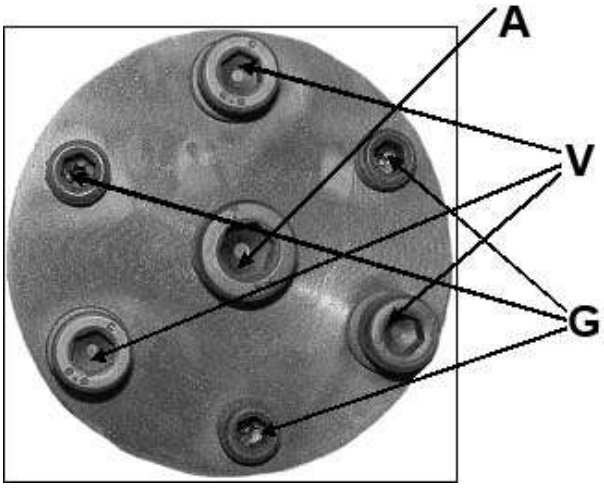


While the work pieces slide to the left:

1) Turn the screws V counterclockwise for one round respectively.

2) Turn the screws G counterclockwise respectively for a half round (or according to real condition).

3) Lock the screws V clockwise.

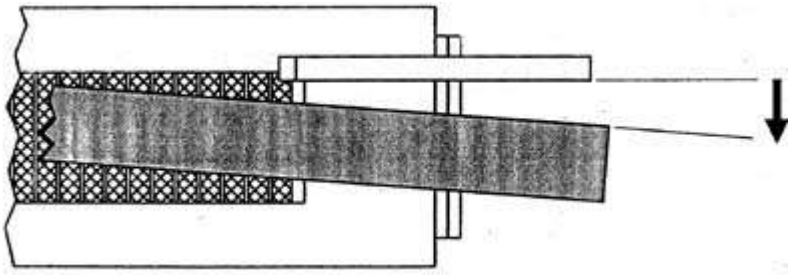

While the work pieces slide to the right:

1) Turn the screws V counterclockwise for two rounds respectively.

2) Turn the screws G clockwise respectively for a half round (or according to the real condition).

3) Lock the screws V clockwise.

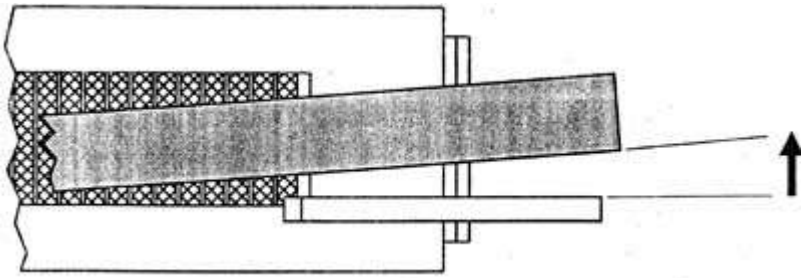

## 7-6. Check and maintenance

| No. | Check part | Check periods | Check and maintenance | remark |
|---|---|---|---|---|
| 1 | Locking device | Before working | Check the operation after locking | |
| 2 | All the switch | 80 hours | Function check | |
| 3 | Emergency stop | 80 hours | All the button check | Beforehand clean |

# VIII. Trouble and trouble shooting

## 8-1. Machine and electric trouble shooting

| No. | Trouble | CAUSE | MEASURES |
|---|---|---|---|
| 1 | Can't start-up the machine | a) )Don't open the main switch b)There is no voltage on the electrical wire | a) Open the main switch<br>b)Check the enter line voltage |
| 2 | Electrical indicator light is not bright | a)There is no voltage on the electrical wire<br>b)Control transformer fuse wire fusing | a)masterstroke voltage is too low or at least lack of 1 phase<br>b)Check the initial classification fuse wire of transformer |
| 3 | Can't start-up the motor | a) Emergency button is pressed.<br>b) Don't shut up the door of protection device<br>c) The motor is over loading protect, control loop is cut<br>d) The anti-kickback of in-feed is uplift | a)Circumrotate and replacement the emergency stop button ( two part)<br>b)Close the spindle door, chain bottom door, belt door<br>c) Confirm which motor is over loading, after eliminate the machine trouble, replace the corresponding thermal relay<br>d) Set level anti-kickback, make it |
| 4 | Can't start-up the spindle and feeding | a) Lubrication pump is lack of oil<br>b) The switch for feeding thickness limit switch is working | a) Oiling into the standard pump<br>b) Elevate the working height of pressing roller box |
| 5 | Feeding is not smooth | a) The press power is too low | Play down the working height of pressing roller box |

## 8-2. Machine trouble shooting

| No. | Trouble | CAUSE | MEASURES |
|---|---|---|---|
| 1 | The work-piece is deflection (big and small head) | The guiding rule is not parallel with lead rail | Check and adjust the guiding rule |
| 2 | The work-piece is bend | a) The driven chain wheel is not parallel with lead rail<br>b) The guiding rule is not parallel with lead rail<br>c)The quality of work-piece board face is | a)Adjust as the picture " adjusting feed in deflection"<br>b) Check and adjust the guiding rule<br>c)Check the benchmark of board face and make it the equal thickness |
| 3 | The error of equal thickness working is too big | a)Press material is too heavy<br>b)Long pressing plate is not parallel with chain plate<br>c)The face of long pressing plate is bend<br>d) The quality of | a)Adjust the press quantity<br>b)Check and adjust the long pressing plate<br>c)Change the long pressing plate<br>d)The working work-piece should be straightness and equal thickness |
| 4 | The dent of work-piece is round off | The press material is too heavy | Adjust the pressure of press roller |
| 5 | The sawing surface is not flat | a)The quality of saw blade is weak<br>b)The feeding speed is too rapid<br>c) The saw blade is not shape<br>d)The press material is too light | a)Change the high quality saw blade<br>b)Reduce the feeding speed<br>c)Grind the saw blade<br>d)Adjust the press quantity of press roller |

# IX. EASY DAMAGE PART ANS SPARE PART

## 9-1. THE POSITION OF SPARE PART AND LIST

1) The position of up pressure wood and up anti-kickback device position

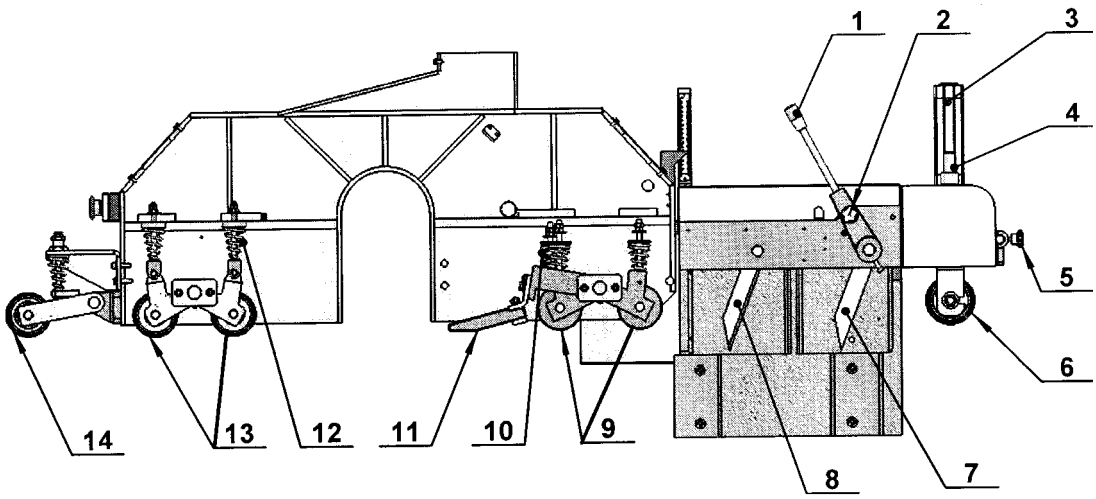


| No | Code name | Name | Specification and mode | remark |
|---|---|---|---|---|
| 1 | | Long handle cover | | |
| 2 | | Pentacle handle | B-M8×32 | |
| 3 | SI-50×125 | Air cylinder | | |
| 4 | | Five star handle | M16×65 | |
| 5 | | Pentacle handle | M8×18 | |
| 6 | 6205-2RS | Deep groove ball bearing | φ52×φ25×15 | |
| 7 | MJ145E-06-04-03/03A | Anti-kickback finger | (thickness 8/4) | |
| 8 | MJ145E-06-04-06 | Front-side anti-kickback finger | | |
| 9 | 6204-2RS | Deep groove ball bearing | φ47×φ20×14 | |
| 10 | MJ143E-06-04-14 | Pressure spring | φ4.5×φ39×100 | |
| 11 | MJ145E-06-02-09 | Attach pressure wood board | | |
| 12 | MJ143E-06-03-14 | Taper spring | φ4.5×φ18～φ45.5×83 | |
| 13 | 6204-2RS | Deep groove ball bearing | φ47×φ20×14 | |
| 14 | 6204-2RS | Deep groove ball bearing | φ47×φ20×14 | |

2) Feed in device position

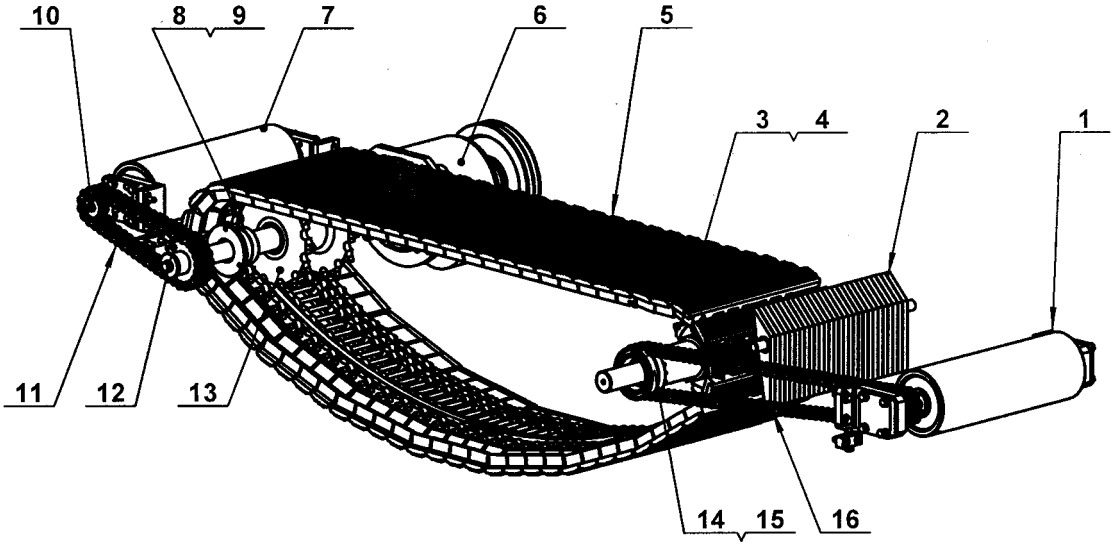


| No | Code name | Name | Specification and mode | remark |
|---|---|---|---|---|
| 1 | 6005-2RS | Deep groove ball bearing | φ47×φ25×12 | |
| 2 | MJ143E-02-02-02 | Below anti-kickback finger | | |
| 3 | MJ145H-02-12 | Driven chain wheel | | |
| 4 | 6208-2RS | Deep groove ball bearing | φ80×φ40×18 | |
| 5 | MJ145H-02-01 | Chain combination | | |
| 6 | TRFS78-Y4.0-36.01-M1-Φ250 | Hard tooth surface reduction gear | | |
| 7 | 6005-2RS | Deep groove ball bearing | φ47×φ25×12 | |
| 8 | 6010-2RS | Deep groove ball bearing | φ80×φ50×16 | |
| 9 | 6207-2RS | Deep groove ball bearing | φ72×φ35×17 | |
| 10 | MJ145F-02-01-04 | Below feeding roller chain wheel one | | |
| 11 | 10A-2 | Double queue sleeve roller chain | | |
| 12 | MJ145H-02-08 | Below feeding roller chain wheel two | | |
| 13 | MJ145H-02-07 | Drive chain wheel | | |
| 14 | MJ145H-02-13 | Below feeding roller chain wheel three | | |
| 15 | 61808-DDU | Deep groove ball bearing | φ52×φ40×7 | |
| 16 | 10A-2 | Double queue sleeve roller chain | | |

3) Press roller box lifting device position

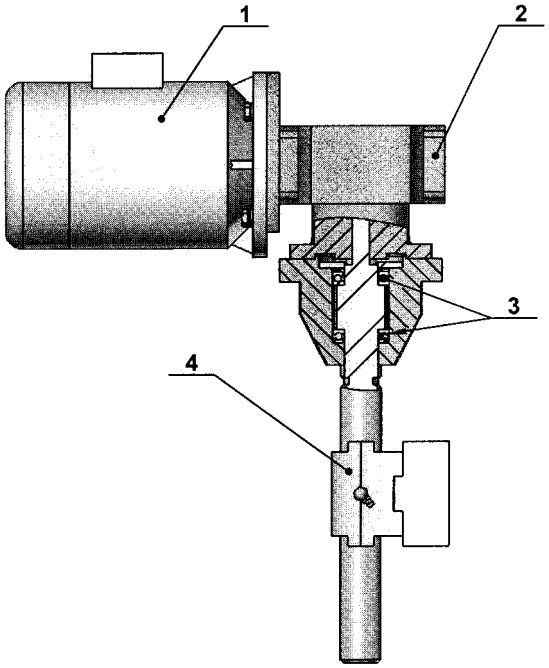


| No. | Code name | Name | Specification and model | remark |
|---|---|---|---|---|
| 1 | Y2-71M4-4-B5-0.75KW | Three phase intercommunion electromotor | | |
| 2 | JRST-D63-40-B6Q-71B5 | Minitype worm wheel speed-down engine | | |
| 3 | 51107 | Thrust ball bearing | φ52×φ37×12 | |
| 4 | MJ143E-05-06-04 | Press roller lifting nut | Combination piece | |

4) Spindle lifting device position

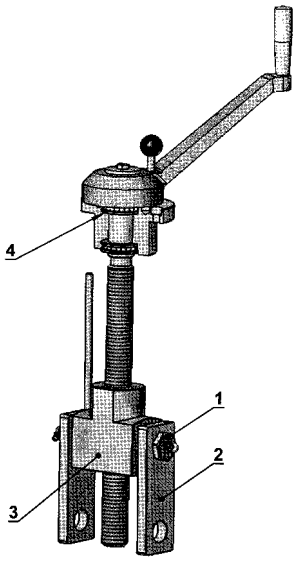


| No. | Code name | Name | Specification and model | remark |
|---|---|---|---|---|
| 1 | MJ143E-05-03-17 | Spindle lifting elevator mechanism | | |
| 2 | MJ143E-05-04-04 | Spindle lifting hanger plate | | |
| 3 | MJ145E-05-04-03 | Spindle lifting nut | | |
| 4 | 51107 | Thrust ball bearing | φ52×φ35×12 | |

5) Spindle device position

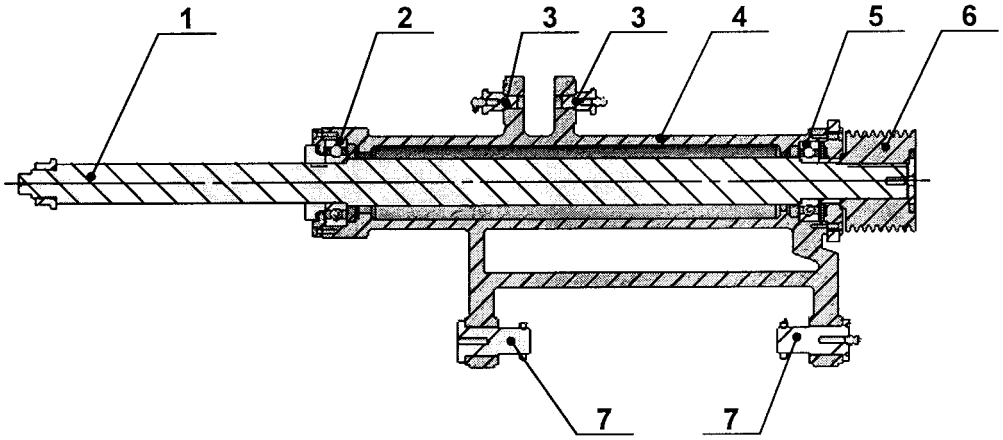

| No. | Code name | Name | Specification and model | remark |
|---|---|---|---|---|
| 1 | MJ145H-05-02-01 | Spindle | | |
| 2 | 6213-VV | Deep groove ball bearing | φ120×φ65×23 | |
| 3 | MJ143E-05-03-17 | Spindle lifting hanger shaft | | |
| 4 | MJ145E-05-03-01 | Spindle frame | | |
| 5 | 6311-VV | Deep groove ball bearing | φ120×φ55×29 | |
| 6 | MJ145E-05-03-08 | Spindle belt wheel | | |
| 7 | MJ143E-05-03-05 | Spindle gemel | | |

## 9-2. Easy damage part list

| No. | Code name | Name | Installation position | remark |
|---|---|---|---|---|
| 1 | MJ145H-01-07 | Dust brush | Machine frame | Attached drawing No.1 |
| 2 | MJ143H-01-05 | Guide catch plate | Machine frame | Attached drawing No.2 |
| 3 | MJ145E-05-09-08 | Reducing sleeve nut | Main spindle | Attached drawing No.3 |
| 4 | 5V-800( Lw=2032) | Narrow V belt | Main spindle transmission | Attached drawing No.4 |
| 5 | MJ145E-01-03 | Triangle lead rail strip | Machine frame | Attached drawing No.5 |
| 6 | A-45（L=1143） | Triangle belt | Feeding transmission | |
| 7 | MJ145H-02-01-01 | Chain plate one | | |
| 8 | MJ145E-02-01-02 | Chain connection pin | | |
| 9 | φ7 | Open mouth check ring | | |
| 10 | MJ145H-05-03-00 | Reducing sleeve assembly | | |
| 11 | MJ145H-06-02-01 | Press roller inside bracket | | |
| 12 | MJ145H-06-02-02 | Press roller outside bracket | | |

## 9-3. Easy damaged part attached drawing

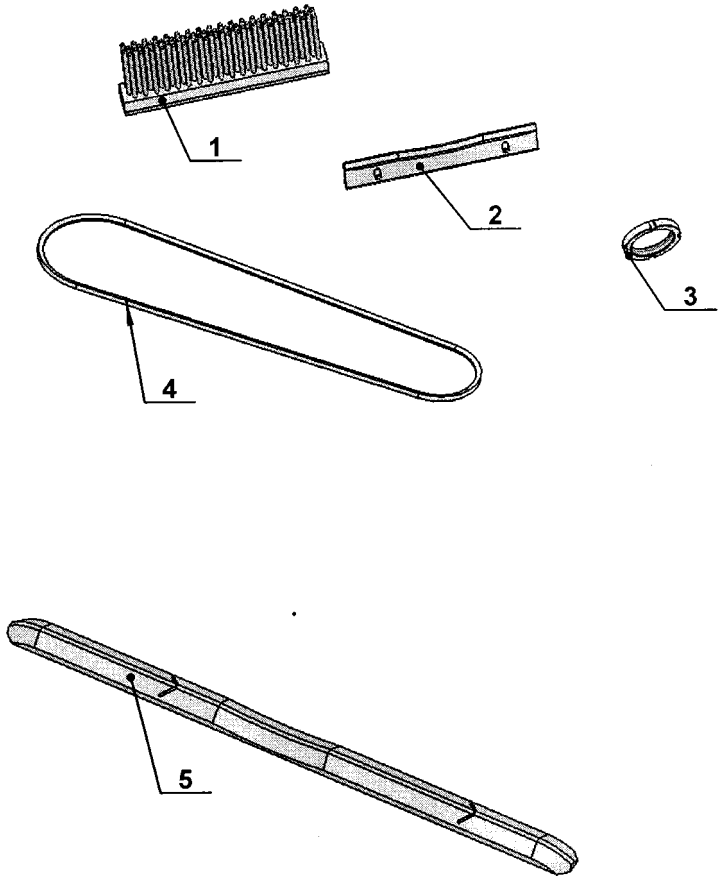


## Appendix I Installation and adjustment of pressing plate

**Installation and adjustment of long pressing plate (for short piece):**

1. Lift the pressing rollers seat to proper height (80mm).
2. Dismount the right and left cover plates and the short pressing plate.

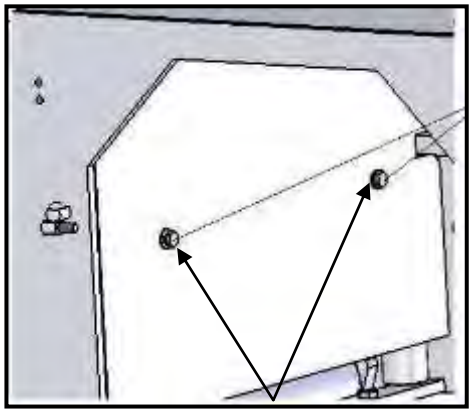

Dismount the bolts

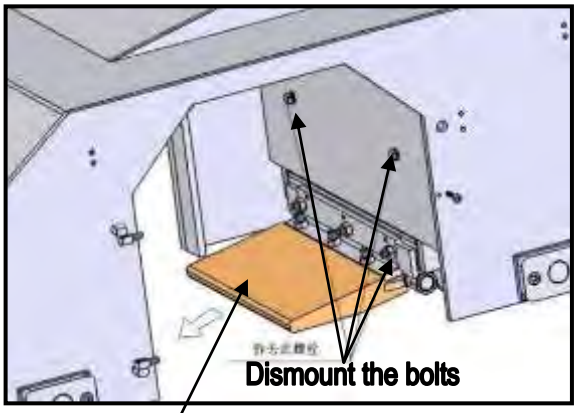


Short pressing plate

3. Install the back bracket of the pressing plate on the pressing rollers seat.
4. Install the fixing seat of the pressing plate on the front and back bracket.
5. Install the pressing plate on the fixing seat.

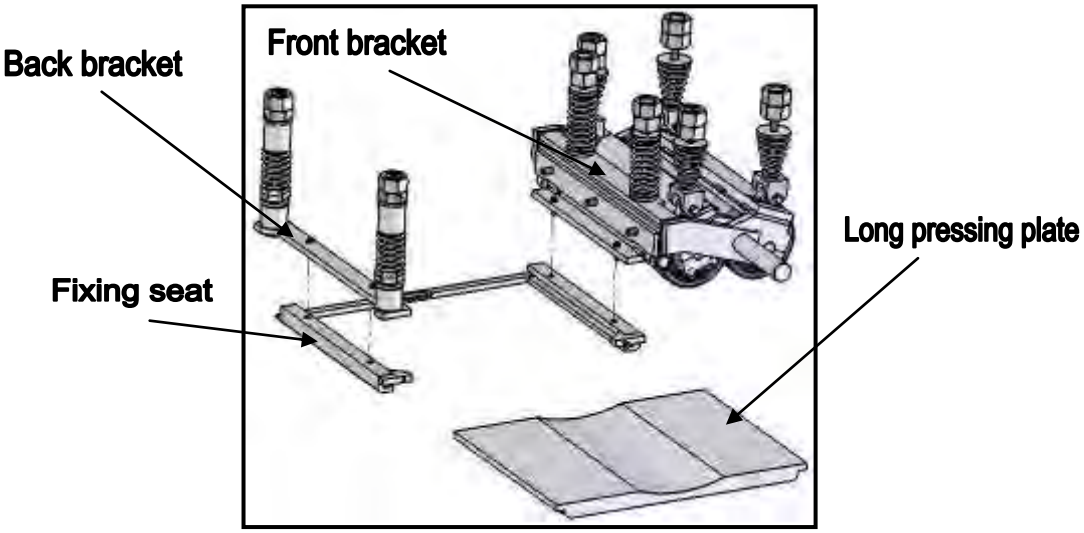


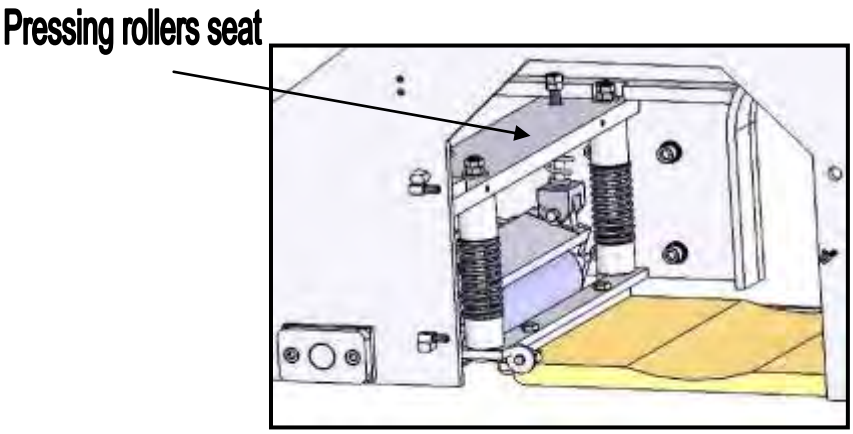


6. Loosen the nuts of the four spring rod on the pressing plate.
7. Adjust the nuts of the four spring rod to set the height of the pressing plate. Set the bottom surface of the pressing plate to be about 1mm higher than the bottom generant of the feeding rollers.
8. After adjustment, tighten the nuts and the right and left cover plate.

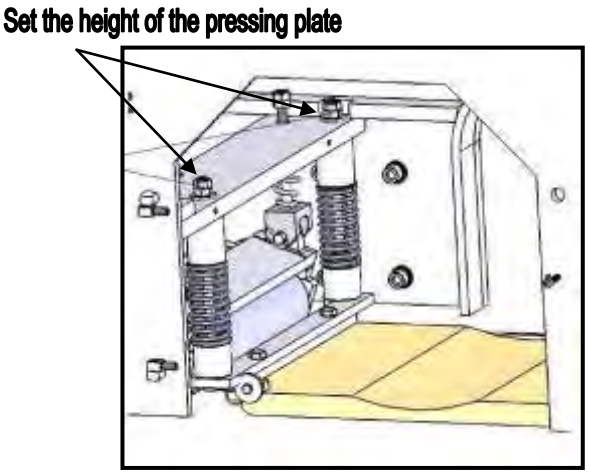


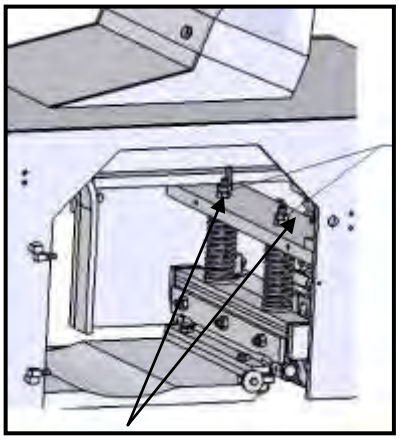

**Installation and adjustment of short pressing plate(for long piece and thick piece):**

1. Dismount the long pressing plate and the fixing seat. (The left bracket does not need to be dismounted.)

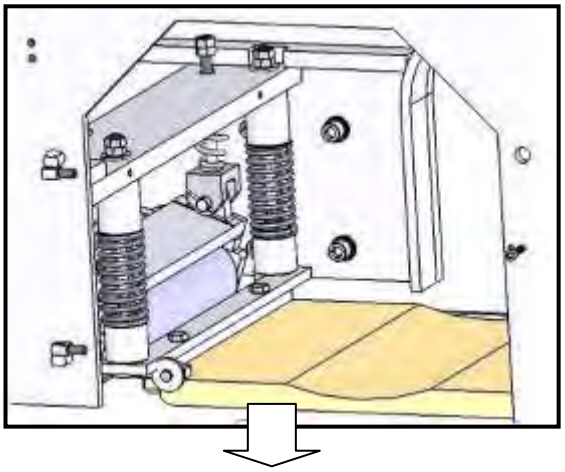

Dismount the long pressing plate and fixing seat

2. Install the short pressing plate on the pressing rollers seat.
3. Adjust the height of the pressing rollers to be 30mm.
4. Adjust the three adjusting screws on the fixing seat, setting the distance from the lowest point of the pressing plate to the work table to be 37mm. (The feeding chain block is 7mm lower than the work table.)
5. After adjustment, tighten the parts and the nuts of the adjusting screws.

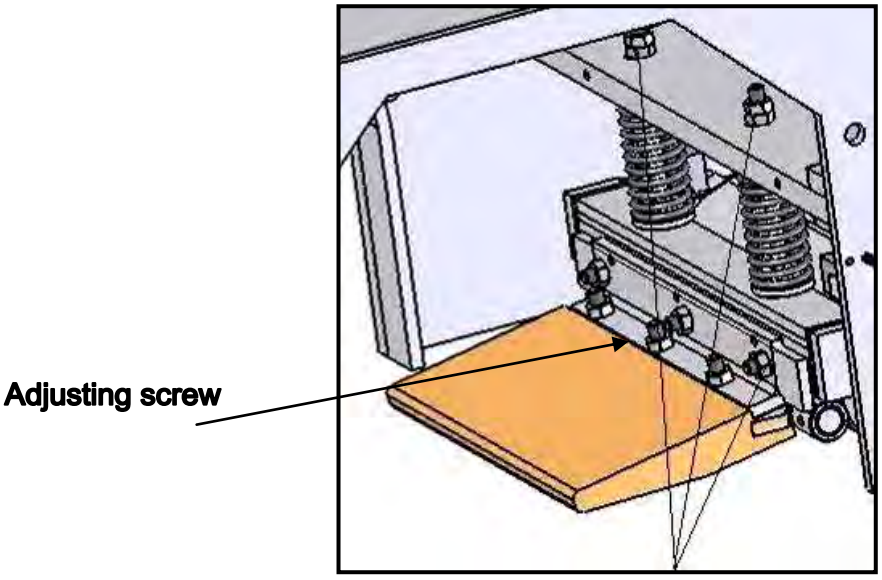


Mount the short pressing plate and adjust its height

## Appendix Ⅱ：Micro programming mode alternating ampere meter using instruction

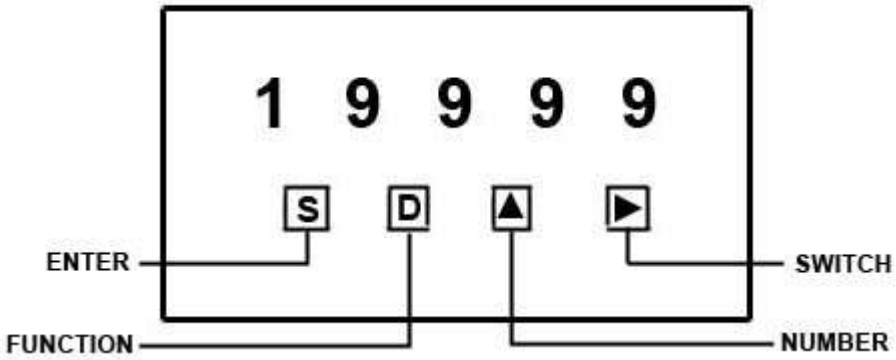


Enter key: To enter the operation status. Display ‘00’ blinks.

Function key: ‘02’ ’03’ ‘04’ ’05’ ‘06’ ‘07’ ‘08’ ‘09’ and ‘51’ ‘52’ ‘53’ ‘54’ ‘55’ 56’ ‘57’ ‘58’ ‘59’ functions etc.

02: ZERO position 0-19999C

03: SPAN position 0-19999C

04: Choose the decimal point

05: Output Option

06: Transfer Speed Option

07: Bit Address Option

08: Output (Combined with 05, Two level, Level 1 SPAN, Level 2 ZERO)

09: Save

51: S1 Preset Value 0-19999

52: S1 No Action Range 0-9999

53: S1 Action Delay Time 0-99s

54: S2 Preset Value 0-19999

55: S2 No Action Range 0-9999

56: S2 Action Delay Time 0-99s

57: S1:S2 combination, four combinations (1=Hi, 0=Lo) Hi-Hi, Hi-Lo, Lo-Hi, Lo-Lo

58: Start Delay Time 0-999, input from 0, no action during this period

59: Save

Number key: Choose number from 0 to 9.

Switch key: Switch the digits

For example:

I/P: CT 150/5A, indication AC0-150.0A, (in this case, ZERO is 0, SPAN is 1500, decimal point is 1)

O/P: DC 4-20mA in correspondence with 0-150.0A

Hi-Lo settings: Hi is 120.0A, Action Delay Time 15s, No Action range 8C.

Lo is 80.0A, Action Delay Time 5s, No Action range 3C.

Press key ‘S’ to enter operation status, ‘00’ display blinks.

Press key ‘D’ to enter 02 ZERO. Press key ‘D’ again. Use the Number key and Switch key to set the displayed number to be ‘0000’

Press key ‘D’ to enter 03 SPAN, press key ‘D’ again. Use the Number key and Switch key to set the displayed number to be ‘1500’.

Press key ‘D’ to enter 04 Choose the decimal point. Press key ‘D’ again. Use the Switch key to move the decimal point to ‘1888.8’.

Press key ‘D’ to enter 05 Output Option. Press key ‘D’ again. Use the Number key to set the value to be 4-20mA.

Press key ‘D’ to enter 08 Output. Press key ‘D’ again. Use the Number key and Switch key to set SPAN (Level 1) as 1500; set ZERO (Level 2) as 0000.

Press key ‘D’ to enter 09 Save. Press key ‘D’ again. Use the Number key and Switch key to set the displayed number to ‘99’. Press key ‘D’ to finish setting works.

a) To indicate 150.00A, in this case, set 03 SPAN to 15000; set 04 Choose the decimal point to 188.88; set 08 Output SPAN (Level 1) to 15000.

Action settings:

Press key ‘S’ to enter operation status, ‘00’ display blinks.

Press the Switch key to enter 51 S1 Preset Value. Press key ‘D’ again. Use the Number key and Switch key to set the displayed number to be 1200.

Press key ‘D’ to enter 52 S1 No Action Range. Press key ‘D’ again. Use the Number key and Switch key to set the displayed number to be 0008.

Press key ‘D’ to enter 53 S1 Action Delay Time. Press key ‘D’ again. Use the Number key and Switch key to set the displayed number to be 15.

Press key ‘D’ to enter 54 S2 Preset Value. Press key ‘D’ again. Use the Number key and Switch key to set the displayed number to be 0800.

Press key ‘D’ to enter 55 S2 No Action Range. Press key ‘D’ again. Use the Number key and Switch key to set the displayed number to be 0003.

Press key ‘D’ to enter 56 S2 Action Time Delay. Press key ‘D’ again. Use the Number key and Switch key to set the displayed number to be 06.

Press key ‘D’ to enter 57 S1:S2 Combination. Press key ‘D’ again. Use the Number key and Switch key to set the displayed number to be 10.

Press key ‘D’ to enter 59 Save. Press key ‘D’ again and use the Number key and Switch key to set the displayed number to be 99. Press key ‘D’ again to finish setting.

## Appendix Ⅲ: Saw blade drawing

Max. saw blade diameter: φ505mm

Min. saw blade diameter: φ405mm

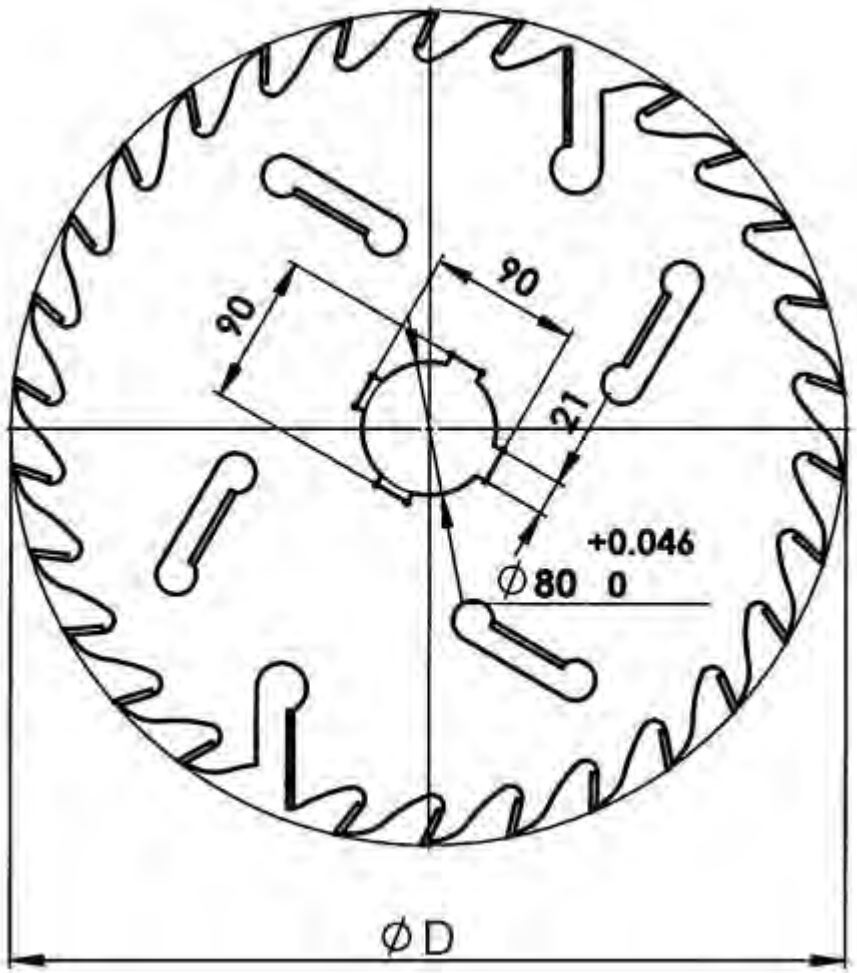

# Appendix IV: Main item checked numerical value

**Administer standard thereunder: EN1870-4: 2001 JB/T5730-91**

| No. | Check item | Sketch map | Permission value | Practicality value |
|---|---|---|---|---|
| 1 | Spindle radial jumpiness | 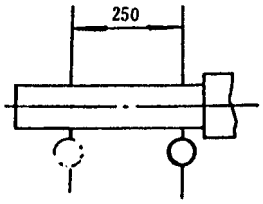 | 0.03 | |
| 2 | Spindle ring flange end face jumpiness | 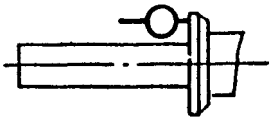 | 0.04 | |
| 3 | Beeline degree of saw section | 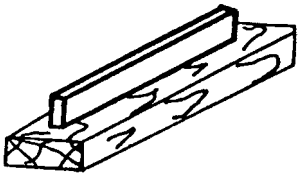 | 0.25/1000 | |
| 4 | Uniformity degree of saw plate | 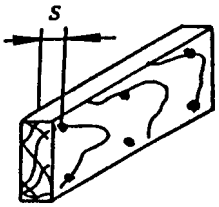 | 0.40/1000 | |
| 5 | Vertical degree of saw section to base level | 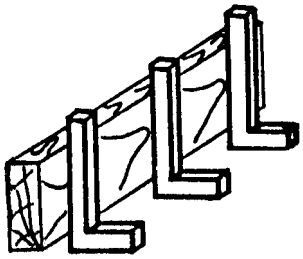 | 0.20/100 | |

**Working precision cutting condition:**

**a、Tying work-piece should be deal or other middle soft wood which the containing water or moisture is not exceed 15%。The dimension of work-piece is 1100x125x40, and the plane degree of datum plane is 0.15/1000**

**b、Sawing as the design criterion，when the quantity of saw blade is exceed 4 piece, sawing as 4 saw blade。**

**c、The quality of saw b lade should accord with relate request。**

**Checker: Date:**