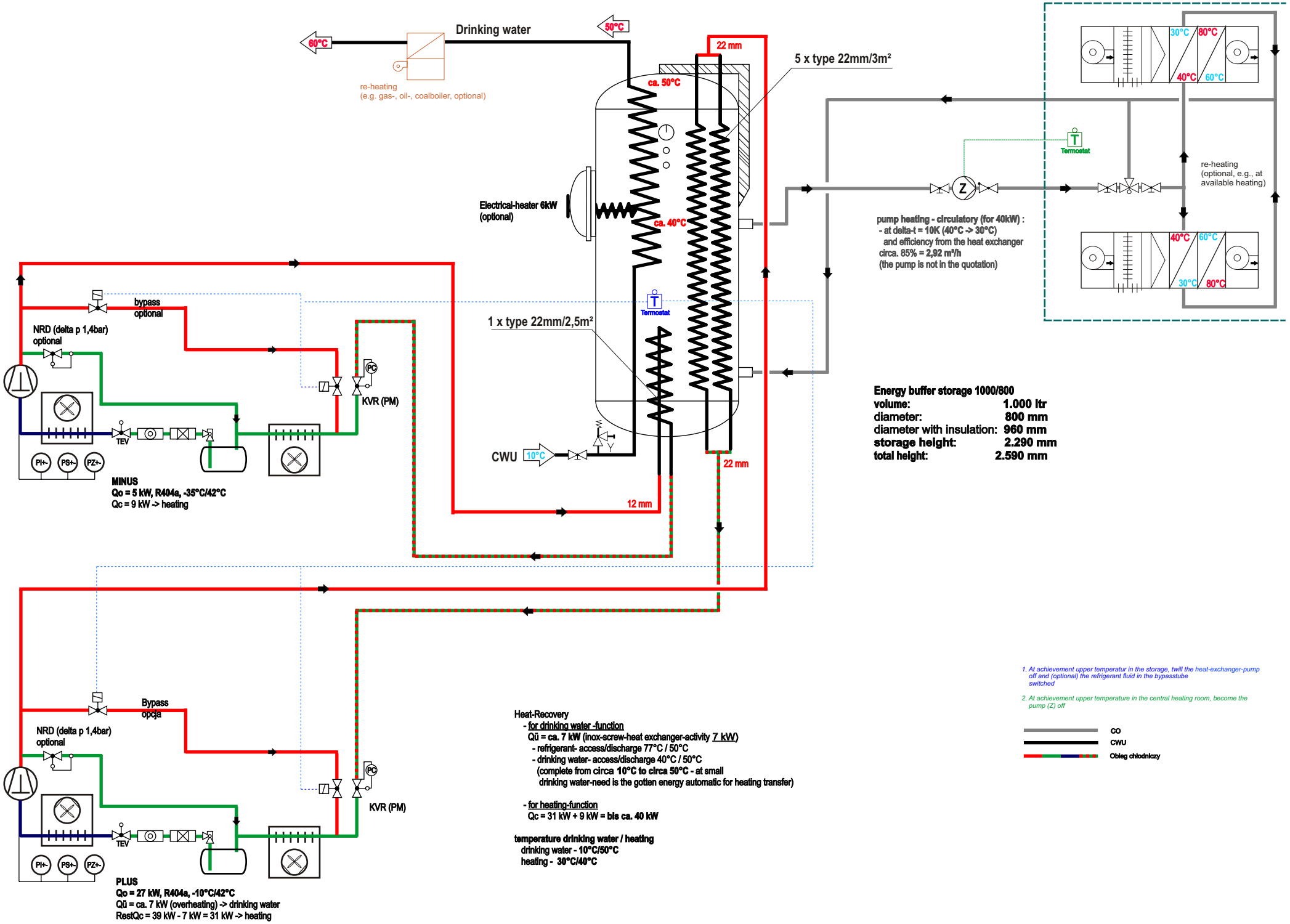
Drinking water
60°C
50°C
re-heating
(e.g. gas-, oil-, coalboiler, optional)
22 mm
5 x type 22mm/3m²
ca. 50°C
Electrical-heater 6kW
(optional)
ca. 40°C
Termostat
1 x type 22mm/2,5m²
CWU
10°C
22 mm
12 mm
30°C
80°C
40°C
60°C
Termostat
re-heating
(optional, e.g., at
available heating)
pump heating - circulatory (for 40kW) :
- at delta-t = 10K (40°C -> 30°C)
and efficiency from the heat exchanger
circa. 85% = 2,92 m³/h
(the pump is not in the quotation)
bypass
optional
NRD (delta p 1,4bar)
optional
PC
KVR (PM)
TEV
PI+-
PS+-
PZ+-
MINUS
Qo = 5 kW, R404a, -35°C/42°C
Qc = 9 kW -> heating
Energy buffer storage 1000/800
volume: 1.000 ltr
diameter: 800 mm
diameter with insulation: 960 mm
storage height: 2.290 mm
total height: 2.590 mm
Bypass
opcja
NRD (delta p 1,4bar)
optional
PC
KVR (PM)
TEV
PI+-
PS+-
PZ+-
PLUS
Qo = 27 kW, R404a, -10°C/42°C
Qü = ca. 7 kW (overheating) -> drinking water
RestQc = 39 kW - 7 kW = 31 kW -> heating
Heat-Recovery
- for drinking water -function
Qü = ca. 7 kW (inox-screw-heat exchanger-activity 7 kW)
- refrigerant- access/discharge 77°C / 50°C
- drinking water- access/discharge 40°C / 50°C
(complete from circa 10°C to circa 50°C - at small
drinking water-need is the gotten energy automatic for heating transfer)
- for heating-function
Qc = 31 kW + 9 kW = bis ca. 40 kW
temperature drinking water / heating
drinking water - 10°C/50°C
heating - 30°C/40°C
1. At achievement upper temperatur in the storage, twill the heat-exchanger-pump off and (optional) the refrigerant fluid in the bypasstube switched
2. At achievement upper temperature in the central heating room, become the pump (Z) off
CO
CWU
Obieg chłodniczy