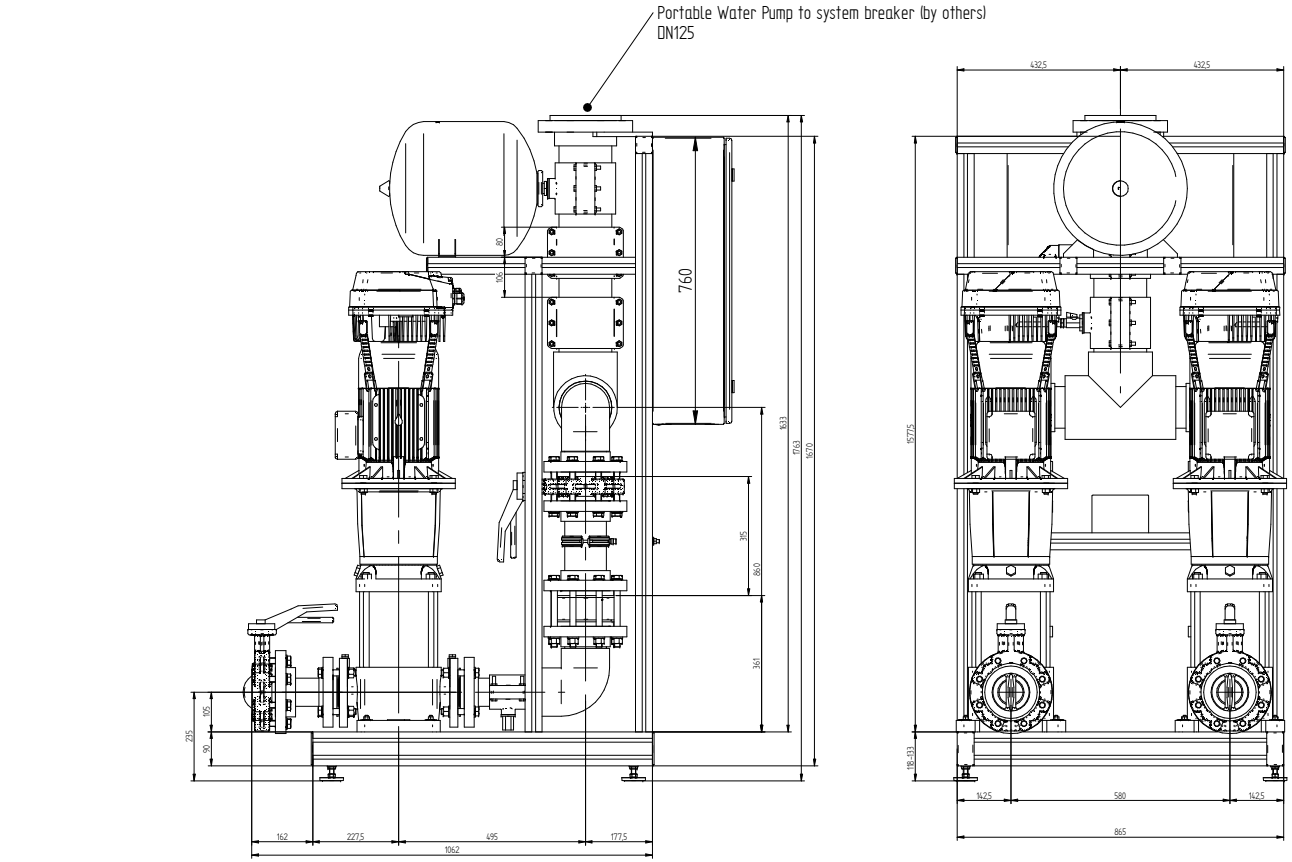

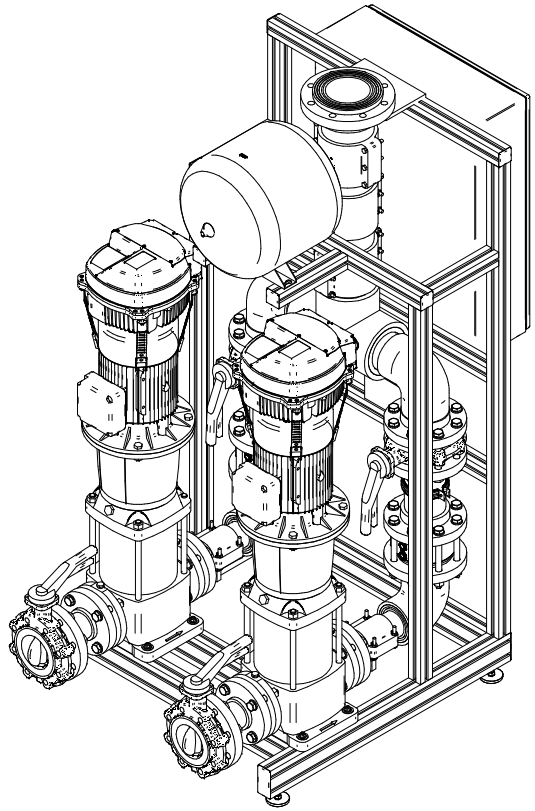

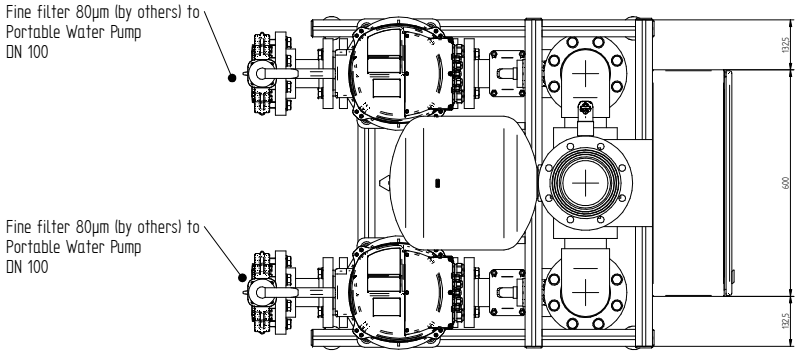

Quality testing based on DIN 40080	
	Sampling inspection to AP
	100% inspection
Ja	Water wetted component

0	19.04.2017	Stangl Jürgen	Erste Ausführung
1	14.05.2017	Stangl Jürgen	Switch cabinet changed
1.1	04.07.2017	Stangl Jürgen	Switch cabinet changed
Index	Date	Name	Last Modified

grünbeck

	Date	Name
Drawn	19.04.2017	Stangl Jürgen
Checked		
Appr.		

Changed dimensions

DIN ISO 2768-mK

Surface

Scale: 1:5 | Status: Freigegeben | Weight:

Drawing No.: [redacted] | Material:

Page: [redacted]

Art.No.: [redacted]

Sheet: 1 / 1

Description: Portable Water Pump with Lentral Switch Cabinet PW

Any legal and patent protection is called upon for this drawing.
It should not be copied or passed to third parties without our consent.
Changes generally require our written authorisation!

PDM_04205.prt

A0